Contract No:

This document was prepared in conjunction with work accomplished under Contract No. DE-AC09-09SR22505 with the U.S. Department of Energy (DOE) National Nuclear Security Administration (NA).

Disclaimer:

This work was prepared under an agreement with and funded by the U.S. Government. Neither the U. S. Government or its employees, nor any of its contractors, subcontractors or their employees, makes any express or implied:

1) warranty or assumes any legal liability for the accuracy, completeness, or for the use or results of such use of any information, product, or process disclosed; or
2) representation that such use or results of such use would not infringe privately owned rights; or
3) endorsement or recommendation of any specifically identified commercial product, process, or service.

Any views and opinions of authors expressed in this work do not necessarily state or reflect those of the United States Government, or its contractors, or subcontractors.

Filtration Improvements in Support of Increased Salt Waste Processing Throughput at the Savannah River Site - 16173

Jay McCrary, Azadeh Samadi-Dezfouli, Mark Keefer, John Neuville, and Jeffrey Bentley
Savannah River Remediation, LLC
United States Department of Energy
Savannah River Site
Aiken, SC 29808
803-208-6883

ABSTRACT

Crossflow Filtration is currently used at the U.S. Department of Energy (DOE) Savannah River Site (SRS) for the removal of actinides, strontium and sludge solids from the high-level salt waste stored in underground tanks. At SRS, crossflow filtration is deployed in the Actinide Removal Process (ARP). Salt waste is transferred from an underground waste tank to one of two strike tanks where it is struck with Monosodium Titanate (MST), which adsorbs uranium, plutonium and strontium. The MST laden salt waste is then transferred to the ARP filtration facility, which contains the crossflow filter. The filtrate, which is called Clarified Salt Solution (CSS), is sent to a downstream facility for cesium removal, while the MST and sludge solids are concentrated at the filtration facility and eventually sent to the Defense Waste Processing Facility (DWPF) for vitrification. ARP and the downstream cesium removal facility, the Modular Caustic Side Solvent Extraction Unit (MCU), were both developed as an interim salt waste processing technology and as smaller scale radioactive demonstration plants for the Salt Waste Processing Facility (SWPF), which is currently under construction. Since the beginning of ARP in 2008, there have been challenges with achieving desired filtration rates through the crossflow filter system. Historically the crossflow filter system has been the flow limiter in salt waste processing and many changes have been made and are planned to achieve desired throughput, especially as MCU increases its processing capacity. Some of these changes include the design of a new crossflow filter, the implementation of a new process chemistry flowsheet and several operational changes. The modifications to the ARP crossflow filter have helped contribute to periods of record throughput in salt waste processing in FY 2015. This paper will discuss the technical challenges and system limitations of retrofitting an older facility as well as past, present and future modifications to the ARP filtration process in order to achieve salt waste processing goals at SRS.

INTRODUCTION

Savannah River Remediation (SRR) is working to remove, stabilize, and dispose of approximately 36 million gallons of liquid radioactive waste in 43 underground waste tanks at the US DOE's Savannah River Site. The majority of these 36 million gallons is in the form of salt waste. Currently SRR uses the Interim Salt Disposition Project (ISDP) for disposition of this salt waste. The Actinide Removal Process (ARP) is the front end of that process. ARP uses crossflow filtration to remove soluble actinides and strontium from the salt solution.

The ISDP includes the operation of two coupled processes, the first being ARP and the second being the Modular Caustic-Side Solvent Extraction Unit (MCU), which is used for removal of

radioactive cesium. One macro-batch or "salt batch" is assembled in one 4.9 megaliter tank and fed into ARP through the salt batch feed tank, which is located in H Tank Farm Tank 49. Salt solution from Tank 49 is transferred in 14,000 – 14,400 liter batches into one of two strike tanks where MST is added to adsorb soluble actinides and strontium. These batches are then sent to the filtration facility where the actinide and strontium laden MST is concentrated and a clarified salt solution (CSS) is filtered out. This CSS is sent to MCU for cesium removal and eventually the decontaminated salt solution (DSS) is turned into grout for disposal at SRS. The actinides, strontium and cesium are sent to the Defense Waste Processing Facility (DWPF) where they are vitrified and immobilized in glass (See Fig. 1). The MST filtration step is currently and has historically been the flow limiter in salt waste processing and has been the target of operational and physical modifications to maximize salt waste throughput at SRS in order to meet processing goals.

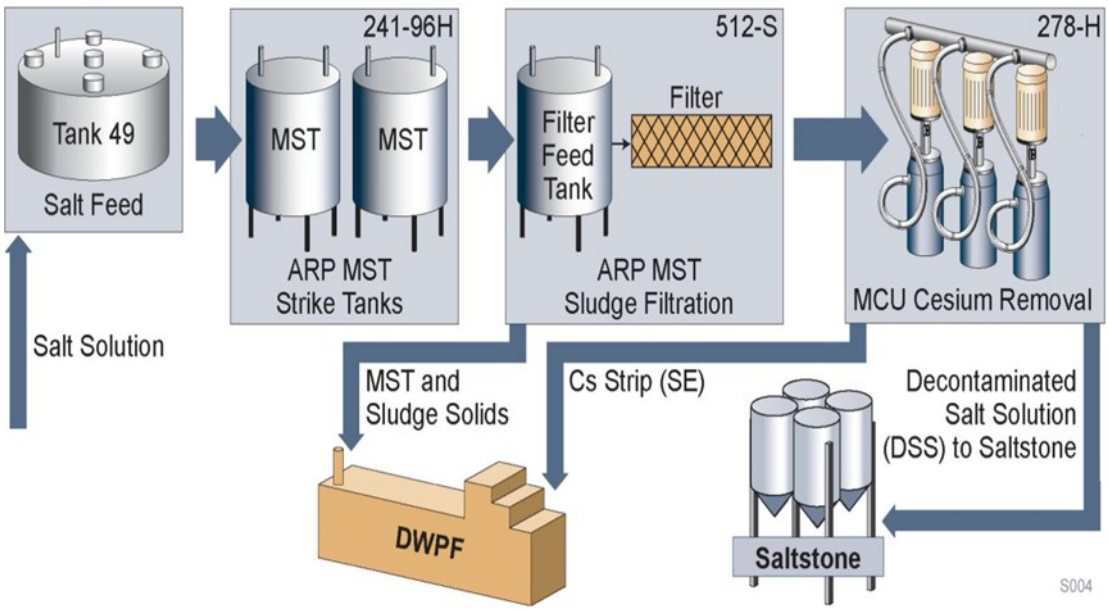

Fig 1. Salt Waste Processing at SRS

FILTRATION FACILITY DESCRIPTION

The ARP filtration process is located in SRS building 512-S. This building was originally designed as an auxiliary pump pit for transfers between DWPF and the H Tank Farm. Since then it has been retrofitted as a filtration facility. The 512-S building includes 3 underground, concrete cells which house the components of the filtration system. There is the precipitate cell, which houses the filter feed tank, the filter cell, which houses the crossflow filter, and the filtrate cell, which houses the filtrate hold tank.

System Description

MST laden salt solution is recirculated from the filter feed tank and through the crossflow filter at ~5500 liters per minute (L/min) The backpressure valve is used to control axial flow through the tubes of the filter as well as provide the backpressure which is the motive force for filtration, known as transmembrane pressure (TMP). The crossflow filter is made up of 144 0.5 micron sintered metal stainless steel tubes. Filtered CSS is flow controlled to 30 L/min to the filtrate hold tank. At the end of the

filtrate line is a dead end "secondary filter" which sits in the bottom of the filtrate hold tank (see Fig. 3). This filter exists as a protection in the event of a breach in the tubes of the primary filter so that solids would not be sent downstream (see Fig. 2).

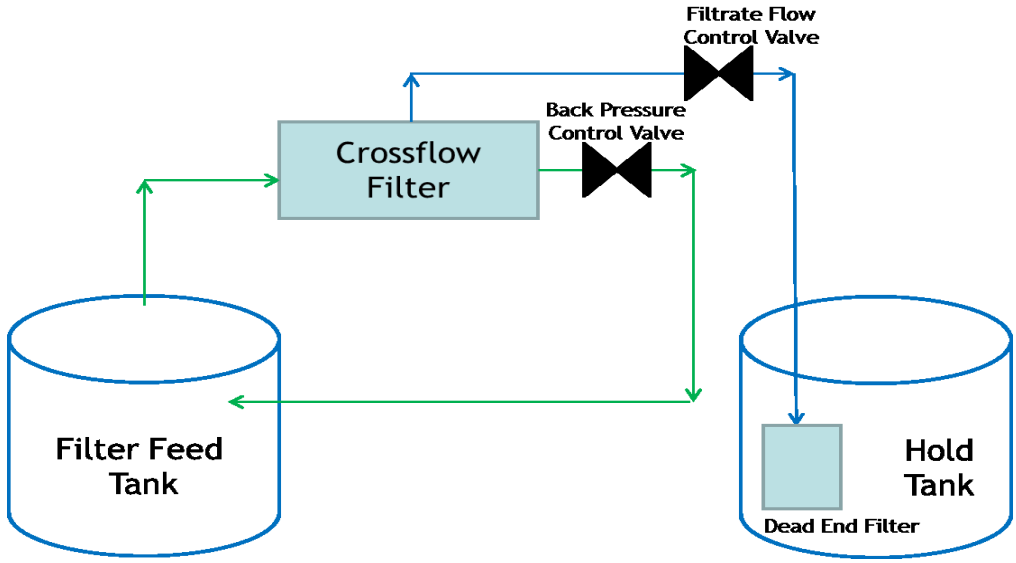

Fig 2. Simplified filtration flow diagram

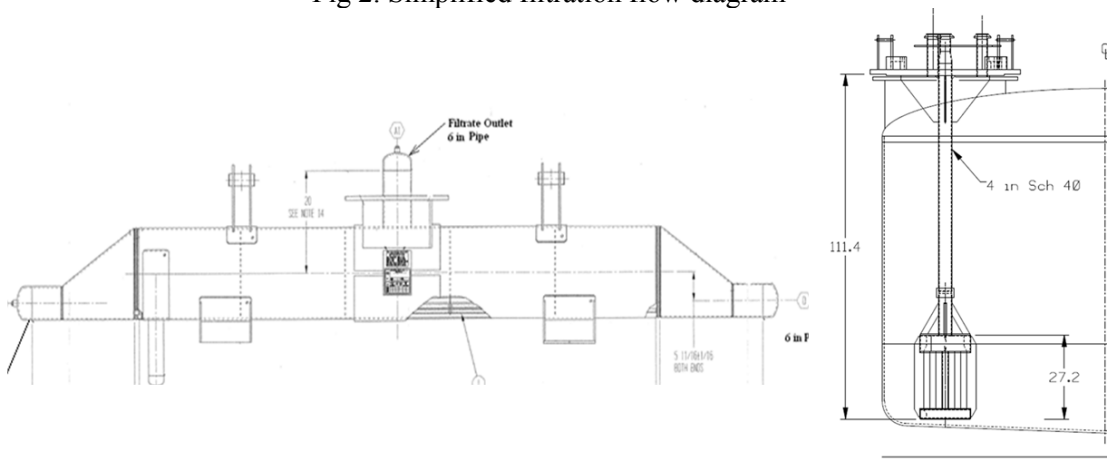

Fig 3. Crossflow (left) and secondary (right) filter design

Process Description

The filtration process is operated as a batch process. One filtration micro-batch is 14,000 – 14,400 Liter of salt solution and MST sent from the MST strike tanks to the filter feed tank. The MST is filtered through the crossflow filter, concentrated in the filter feed tank, and the CSS is accumulated in the filtrate hold tank. Filtration batches are designated as being a part of a filtration cycle. One filtration cycle is the several batches run consecutively in between "batch washes". A batch wash is the washing of sodium ions in the salt solution prior to sending the MST concentrated filter feed tank material to DWPF for vitrification. Typically after a batch washing evolution, the crossflow filter is cleaned with oxalic acid and a new filtration cycle is initiated. A cycle is bounded by the solids concentration in the filter feed tank. The maximum MST solids concentration in the filter feed tank is 5%. A calculation is performed during the cycle, based on total volume transferred, to predict the solids concentration in the filter feed tank. This

also indicates when a batch wash is required, this is typically around 80 batches. It is common, however, to terminate a cycle before the bounding cycle length for filter performance reasons.

HISTORICAL (PRE-FY15) PROCESSING AND LIMITATIONS

The downstream facility, MCU, is run as a continuous process with the capacity to run at a 32 L/min. Historically, the filtration process has been unable to support these flowrates. As a result, several adjustments to the filtration process have been made to increase flow. The filtration performance has historically been unpredictable, the adjustments done have yielded both positive and negative results but have helped develop process knowledge of the filter performance.

Secondary Filter Performance

The dead-end secondary filter has been a filtration flow limiter. The crossflow and secondary filter are closely coupled. The secondary filter was added to filter solids in the event of a breach of the crossflow filter and was not expected to see solids during normal operation. However, the secondary filter has seen elevated pressure build-up, which is an indicator of filter fouling. There have been evolutions performed to clean the secondary filter with oxalic acid, however, the results were mixed. Eventually, due to the time and effort of a secondary filter cleaning evolution, a strategy to replace the secondary filter was adopted once trends indicated that the filter was significantly fouled. The secondary filter fouling is most commonly observed as a significant increase in filtrate line pressure, decrease in TMP and decrease filtrate flowrate across the crossflow filter. The coupling of the crossflow filter and the secondary filter means that plugging of the secondary filter will create a backpressure on the filtrate side of the crossflow filter tubes, which restricts filtrate from flowing through the crossflow filter. The cause of the secondary filter fouling is unknown.

High TMP Operations

The axial flow through the crossflow filter is inversely proportional to the TMP. The system design uses the backpressure control valve to control axial flow. The position of the valve controls both TMP and axial flow. As the valve is closed, the TMP increases, however the axial flow decreases while the filter feed pump runs at constant speed. There are benefits to increasing both the TMP and axial flow above the current operating range, the increase in TMP creates more force through the filter, while the increase in axial flow will decrease the thickness of the filter cake, which can restricts flow when thicker. The process of optimizing these parameters has been iterative throughout the processing history of the filter. In 2013, the most significant change to the TMP operating strategy was made. In this time the backpressure valve was used to control the TMP at a much higher pressure than the filter was operated in the past. Typically the TMP is operated at 172 to 207 kilopascal (KPa), however during this period the TMP was controlled to around 275 KPa. Initially very high flow rates were seen through the filter. However, during this cycle, it was observed that the flowrates dropped off at a much higher rate than before. This was attributed to higher TMP which has the ability to push particles with more force into the pores of the filter media and fouled the crossflow filter at a faster rate. Eventually this operating strategy was terminated when the crossflow filter was unable to recover at an acceptable rate between cleanings.

Crossflow Filter Replacement

In early 2014, degradation of the crossflow filter was observed. This was seen as the inability of the crossflow filter to recover to maximum flowrates (32 L/min) after a batch wash and filter cleaning evolution. Several unsuccessful filter cleanings were performed before the decision was made to replace the crossflow filter. The crossflow filter installed at the time was a 0.1 micron filter. This was the first replacement of the crossflow filter since the start-up of ARP. In March, 2014, the 0.1 micron filter was

replaced with the 0.5 micron filter. The subsequent cycles, showed that the 0.5 micron filter performed similarly to 0.1 micron filter, with respect to flowrates and pressures.

FY15 PROCESSING PERFORMANCE

Processing goals for FY15 were set at 5.3 million liters, which is the highest number to date. The previous year saw a lot of downtimes in salt processing as well as lower than desirable filtration flowrates. The lofty processing goals put an additional focus on filtration. As a result significant effort was put into determining different ways to increase filtration rates in ARP.

Operational Changes

The major operational change that improved the filtration performance was a shift in the cleaning strategy. The previous strategy was to clean based on filter performance. In late FY14, a period of very frequent filter cleanings, there was a shift to begin a "slow and steady" approach and prioritize attainment over high flowrates. This was beneficial in several ways. The first is the unknown chemical impact of batch washing and filter cleaning. In mid FY14 there was large downtime due to a large number of oxalate solids being deposited into the MCU process. This was after a period of frequent cleanings and it was believed that the oxalic acid introduced as part of the filter cleaning contributed to the oxalate solids precipitation. As a result, the frequency of cleaning was reduced to minimize the potential for downstream processing upsets. Additionally, batch washing and cleaning has a negative impact of secondary filter performance (discussed below). While the flowrate recovery experienced after cleaning has a throughput benefit, operational history from FY14/15 has demonstrated that the "slow and steady" approach yielded a higher overall throughput (see Fig. 4). In response to this, the calculation which restricts the overall cycle length was revised. This revision allowed for a bounding cycle length of around 80 batches, where it was previously around 65.

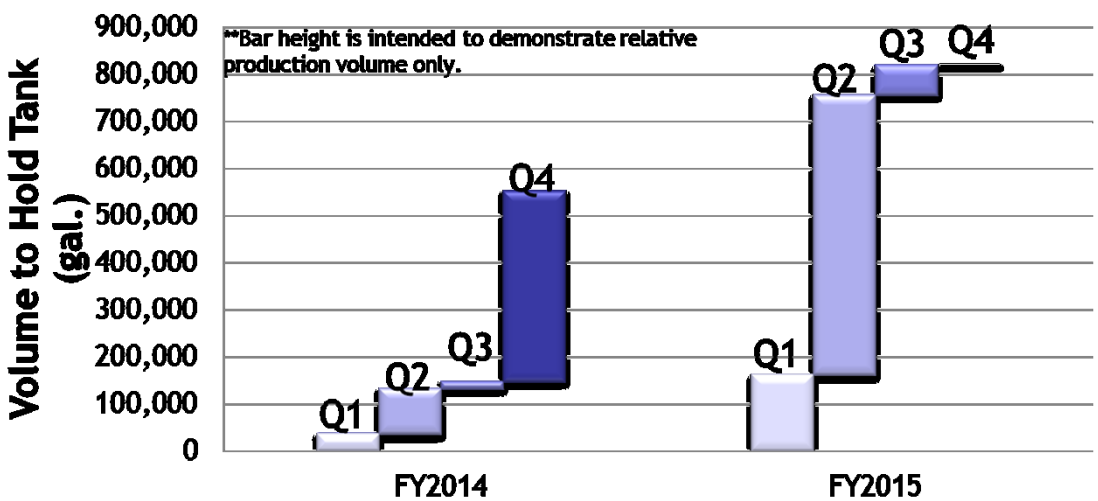

Fig 4. FY14/15 Throughput

The filtration operation procedure was changed several times throughout the year in order to increase filtrate flowrates as much as possible. This included giving the operators more flexibility to close the filter backpressure valve during operation. The procedure has the operators set the backpressure valve for a given axial flow range then let the filtration process run for the duration of the batch. A procedure change decreased the minimum axial flow range, which allowed operators to close that valve slightly farther,

therefore increasing TMP and filtrate flow at an amount that was estimated to not negatively impact the filter, while still maintaining axial flow.

There were several operational changes that were evaluated. One of these was to run the filtration process as a continuous process rather than a batch process, meaning the filter feed pump would not shut off between batches, thus eliminating downtime between batches. High TMP operations was also a proposed operating strategy, however previous operating experience had shown this to be less effective over time and damaging to the crossflow filter. There was discussion to avoid performing filter cleanings between cycles and only batch washing. This would reduce downtime between cycles. However, the filter may be fouled from the previous cycle and flowrate recovery may not be seen between cycles.

Secondary Filter Performance and Flow Limitations

The biggest limitation to flowrates in the past year has been the fouling of the secondary filter. Fouling was observed in two forms. The first was gradual fouling over the life of the filter. The second was an immediate fouling observed directly after batch washing and filter cleaning. Recently, the frequency of filter change-outs has become once every 2 cycles, which depending on processing rate, could be as frequently as every 2 months. Early in the year, 2 fouled secondary filters were sampled and analyzed in order to determine the source of filter fouling. Results were non-conclusive.

In FY15 there were periods of high sustained processing rates between both ARP and MCU. High processing attainment rates and the high frequency of secondary filter replacements introduced the potential for the fabrication lead time to be longer than the life of a secondary filter. As a result, the secondary filter was redesigned. The lead time on secondary filters was primarily due to the very high tolerances on the tank top flange section of the filters, which connects to the jumpers in the cell. The new design created a flange on the stem that goes down from the top of the tank to the secondary filter, which sits on the bottom of the tank (see Fig. 5). This redesign allows for the highly tolerant tank top flange to be re-used, while only the bottom filter portion is replaced. This modification greatly reduces lead time and cost of replacing secondary filter, however it does not address root cause of the filter fouling.

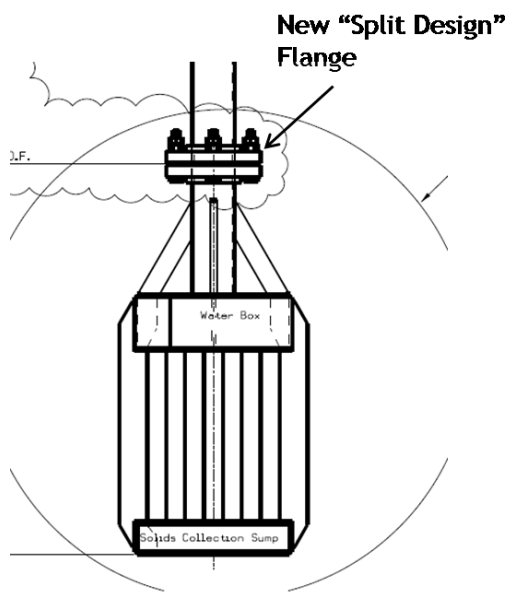

Fig 5. New "split design" secondary filter

FUTURE FILTRATION IMPROVEMENTS

Substantial changes to the filtration process are planned in FY16. These changes are being made to support increasing goals for salt waste throughput. Previous years focused on operational changes to the filtration process to overcome limitations. However, in FY16, two major changes are planned to both the process flowsheet and the system design.

Filter-Only Operations

The Salt Waste Disposal 3116 Basis Document anticipated the potential need to operate interim salt disposition without MST prior to cesium removal in order to meet tank space objectives. MST is believed to be the major flow limiter in the filtration process. MST is thought to be the primary source of crossflow filter fouling. Additionally the increasing concentration of MST in the filter feed tank throughout a filtration cycle is a contributor to flowrate degradation. In FY16 there will be a demonstration of ARP filter-only operations, which will bypass the MST strike tanks and transfer salt solution batches directly from Tank 49 to the filter feed tank (see figure 6). This is expected to result in a higher filtration rate, while also decreasing the rate of filter degradation throughout a cycle. Filter-only operation is also anticipated to reduce the overall number of curies sent for disposition at SRS. By removing the addition of MST solids, the bounding filtration cycle length, can be extended, therefore reducing the frequency of batch washing. Batch washing is the primary source of radioactive material being sent downstream for grout disposal because the filtered batch wash material bypasses MCU cesium treatment.

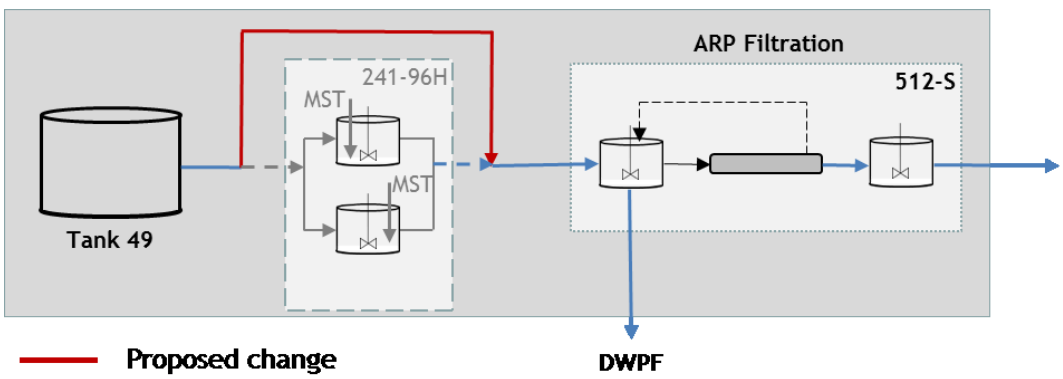

Fig 6. Filter-only operations flowpath

Crossflow Filter "Double-Pass" Redesign

A newly designed crossflow has been procured and is ready for installation. This new crossflow filter has 146 0.1 micron tubes and utilizes a new "double-pass" flow path to effectively double axial flow through the filter. The new design diverts incoming axial flow through only the bottom half of the tubes of the filter. The other end of the filter is capped, which forces the flow through the top half of the tubes and to the filter exit (see figure 7). Increasing axial flow will allow the backpressure valve to be closed farther for a given axial flow, therefore both axial flow and TMP can be increased at the same pumping capacity from the filter feed tank. This new filter has been designed to be installed into the existing field configurations without any modifications in the cell other than the filter replacement.

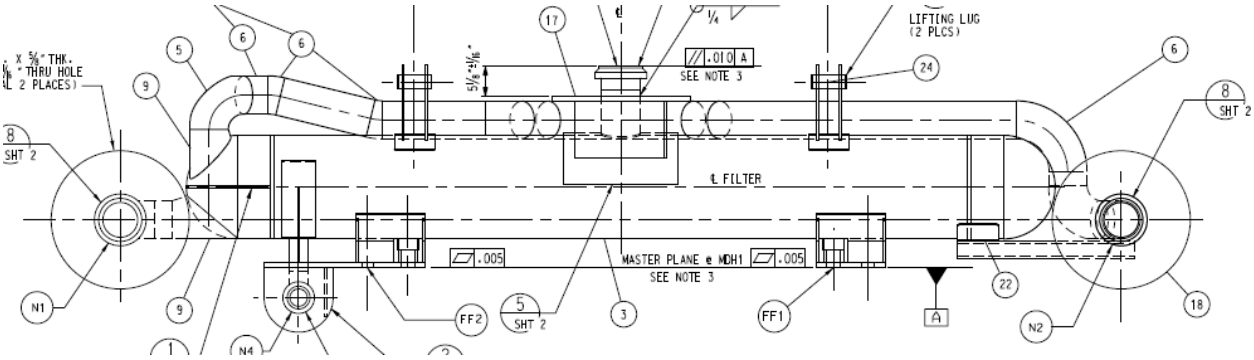

Fig 7. “Double-pass” crossflow filter

CONCLUSION

At the Savannah River Site, the Actinide Removal Process filtration has presented several unique challenges, most stemming from the conversion of an existing facility to suit this purpose. Several improvements to filtration have been made but limitations to higher throughputs still exist. Operational changes have been made over the last several years, and while filtration has improved, there is still a need to increase filtration rates further as salt waste processing goals increase each year. Several changes planned for fiscal year 16 will focus on system and process modifications versus prior operational modifications, thus providing new ways to overcome the limitations of the ARP filtration process.