Contract No:

This document was prepared in conjunction with work accomplished under Contract No. DE-AC09-08SR22470 with the U.S. Department of Energy.

Disclaimer:

This work was prepared under an agreement with and funded by the U.S. Government. Neither the U. S. Government or its employees, nor any of its contractors, subcontractors or their employees, makes any express or implied: 1. warranty or assumes any legal liability for the accuracy, completeness, or for the use or results of such use of any information, product, or process disclosed; or 2. representation that such use or results of such use would not infringe privately owned rights; or 3. endorsement or recommendation of any specifically identified commercial product, process, or service. Any views and opinions of authors expressed in this work do not necessarily state or reflect those of the United States Government, or its contractors, or subcontractors.

Qualification of the Savannah River Site ^{252}Cf Shuffler for Receipt Verification Measurements of Mixed U-Pu Oxides Stored in 9975 Shipping Containers

F.H. DuBose, Ph.D.
SRNS-N3800-2011-00029
Savannah River Nuclear Solutions

Revision 0
May 26, 2011

Qualification of the Savannah River Site ^{252}Cf Shuffler for Receipt Verification Measurementsof Mixed U-Pu Oxides Stored in 9975 Shipping Containers

Franklin H. DuBose
Savannah River Nuclear Solutions

Abstract

To extend their ability to perform accountability and verification measurements of ^{235}U in a U-Pu oxide matrix, the K-Area Material Storage facility commissioned the development and construction of a Passive/Active ^{252}Cf Shuffler. A series of ^{252}Cf, PuO_2, and U-Pu oxide standards, in addition to a single U_3O_8 standard, were measured to characterize and calibrate the shuffler. Accompanying these measurements were simulations using MCNP5/MCNPX, aimed at isolating the neutron count-rate contributions for each of the isotopes present. Two calibration methods for determining the ^{235}U content in mixed UPu oxide were then developed, yielding comparable results. The first determines the ^{235}U mass by estimating the ^{239}Pu/^{235}U ratio-dependent contributions from the primary delayed neutron contributors. The second defines an average linear response based on the ^{235}U and ^{239}Pu mass contents. In each case, it was observed that self-shielding due to ^{235}U mass has a large influence on the observed rates, requiring bounds on the applicable limits of each calibration method.

Introduction

The Savannah River Site (SRS) receives and stores special nuclear material (SNM) from various sites within the Department of Energy (DOE) complex. As part of the receipt and storage process, Nuclear Materials Storage, utilizing the K-Area Material Storage (KAMS) facility, is tasked with receipt confirmation and verification measurements of SNM. Compliance with the DOE Order M 470.4-6 Change 1 and the SRS 14Q manual dictates that these confirmation and/or verification measurements be performed upon receipt of Category I/II material or as part of periodic, special, and International Atomic Energy Agency physical inventories[1,2]. It is also required that the results of verification measurements agree within the established combined limits of error with the shipper declared contents.

Employed in the KAMS facility are several instruments to support accountability and/or verification measurements. The instruments used for confirmatory measurements are Sodium Iodide (NaI) and High Purity Germanium (HPGe) detectors. Receipt verification measurements for plutonium primarily use the KAMS Drum-Sized Neutron Multiplicity Counter (NMC), but may also require the gamma isotopic, neutron, and calorimetric instrumentation housed in the K-Area Interim Surveillance (KIS) facility. All of these instruments have been previously qualified to support confirmatory and/or verification measurements for Pu containers received from both on- and offsite facilities, though the KIS instrumentation is limited to oxides and cannot support accountability and verification measurements for metals, or in drum sized containers [3, 4, 5]. The KAMS and KIS counters have also been qualified, in a limited capacity, to support the measurement of Pu in a mixed oxide matrix, i.e. plutonium oxide (PuO_2) in the presence of uranium oxide (U_3O_8). Results of the limited mixed oxide qualification, which used a series of nine (9) working standards from the Hanford Site, indicated the need for additional instrumentation to verify U_3O_8 in a U-Pu oxide matrix [5].

To extend their ability to perform accountability and verification measurements of uranium(U) in a PU-EU oxide matrix, the K-Area Material Storage (KAMS) facility commissioned the development and construction of a Passive/Active ^{252}Cf Shuffler by Canberra Industries for use in measuring highly enriched uranium (HEU) oxide within a PuO_2 matrix. After receipt and assembly of the ^{252}Cf

Shuffler at the Savannah River Site (SRS), the instrument was qualified for the measurement of Pu-EU oxide, in accordance with the SRS 14Q Material Control and Accountability Procedure 3.02, "Selection, Validation, and Qualification of New Accountability Methods"[2]. This report serves to document the results of the SRS ^{252}Cf Shuffler qualification to measure ^{235}U in uranium-plutonium oxide. Included are the expected instrument performance and material measurement uncertainties under typical operating conditions.

Instrument Description

The primary purpose of the K-Area ^{252}Cf Shuffler is to perform active measurements of ^{235}U. The active measurements use a high activity (~ 600 μg) ^{252}Cf neutron interrogation source. During interrogation, the source moves via a flex cable down a stainless steel tube to positions that allow irradiation of an item. During the neutron-counting portion of the assay, the source returns to the source storage chamber, consisting of a 4" diameter x 4" long tungsten cylinder housed inside a 12" x 12" 0.7% borated high-density polyethylene (HDPE) cube. This cube is housed inside of a larger storage cube, measuring approximately 4' on a side. The source remains in the storage chamber during passive only measurements.

Figure 1 Shuffler Diagrams: Horizontal and Vertical Cross-Sections

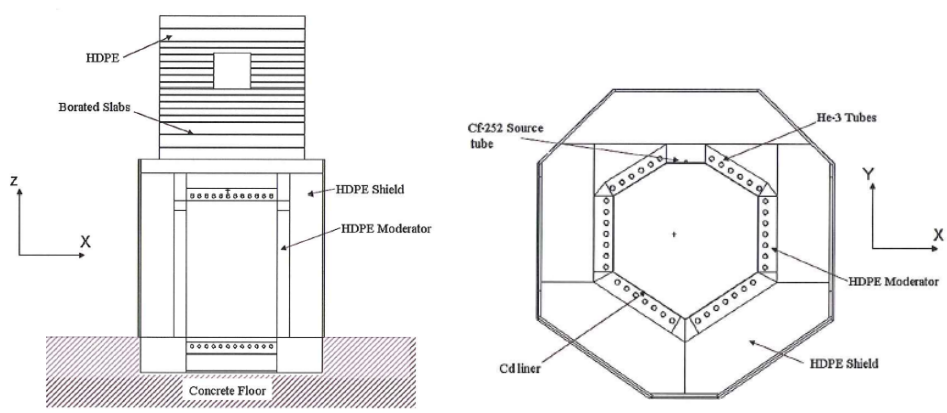

The neutron counters are a single row of 62 10-atm ^{3}He tubes lining the walls as well as the floor and ceiling of the hexagonal assay chamber. The tubes reside in a HDPE moderator bank and are made of 0.02" thick stainless steel. In addition, two 4-atm ^{3}He neutron flux monitors count fast and thermal neutrons during interrogation. Each tube is 1" (2.54 cm) in diameter with walls made of 0.02" (0.0508 cm) thick stainless steel [6, 7]. Analyses performed initially at Canberra and confirmed at SRS indicate that the optimal operating voltage for the ^{3}He tubes is 1720 V [6, 7, 8].

Theory and Principle of Operation

Because neutron counting can occur with or without the ^{252}Cf source in the assay chamber, shufflers can function as both active and passive neutron counters. In active assays, an empty chamber passive count serves as the initial background. Typically, a restriction is put in place such that assay will not proceed above some observed background count rate. Once the item is placed in the assay chamber and prior to irradiation, a second background count is conducted on the item itself; for consistency, the count time and cycle characteristics of both background counts are identical.

The mechanism for delayed neutron production relates to the population of precursor states. After the introduction of energy by neutrons from the irradiating source, a portion of the fission products remain in excited states rather than emitting prompt neutrons. The unstable nuclei may reach a stable state by negative beta decay. However, there is a probability that the nuclei created through beta decay remain unstable. As a result, the nuclei may become stable through either neutron or gamma emission. If the subsequent decay releases a neutron, the nuclei is termed a delayed neutron precursor, as the emission occurs well after the initial event [9, 10].

The primary fissile isotopes present in the plutonium oxide and U-Pu oxide standards are ^{235}U and ^{239}Pu. Irradiating the standards induces fissions in these isotopes. Of these fission neutrons, the majority are prompt, occurring immediately after a fission event. A small fraction of these neutrons (roughly 1 % of the total yield) is delayed in time, being emitted seconds to several minutes after irradiation.

For shuffler measurements, an assay consists of several cycles of irradiation and counting. During irradiation, the source moves close to and scans the item, which is rotated to ensure uniform exposure. Although delayed neutrons may be emitted for several minutes after the initial irradiation, counting occurs for a few seconds before again irradiating the item. In the counting phase, the source returns to a shielded position. The total number of delayed neutrons, summed over all shuffles can then be correlated with the fissile mass.

The active calibration is matrix specific. While the anticipated response can be calculated through simulations and measurements, accurate results can only be ensured by determining the appropriate correction for each matrix type. Therefore, the active calibration presented herein applies only to uranium, plutonium, and combinations thereof in a 9975/3013 configuration. Development of matrix correction factors for other shipping containers is currently in progress.

Qualification

The purpose of the shuffler is to perform receipt verification measurements of SNM for the K-Area Material Storage facility. Thus, it was designed to perform in drum measurements of SNM, which may be housed in 9975, ES3100, 9977, or 6M/2R shipping containers. This report is limited to qualification of the shuffler for measurement of uranium oxide, plutonium oxide, and mixed U-Pu oxide in a 9975/3013 configuration, though the methodology and subsequent results may have applicability for other drum packaging types, as well as for the assay of smaller containers.

Specification of Material Used for Calibration, Qualification, and Acceptance

Calibration of the SRNS ^{252}Cf Shuffler required four sets of standards. The first were the two ^{252}Cf sources listed in Table 1, used for multiplicity characterization. Measurement of the remaining standards following determination of the multiplicity parameters.

Table 1 ^{252}Cf mass and bare source strength

Source I.D.	Mass (μg)	Activity at Reference Date (n/s)	Reference Date
FTC-CF-3895	1.02	2.35×10^6	12/28/2009
FTC-CF-3894	4.36	1.01×10^7	12/28/2009

Because the ^{252}Cf Shuffler will measure total plutonium and ^{235}U in mixed oxide, as well as the plutonium content in high and low purity plutonium oxide, the standards that form the basis for the

material specific instrument qualification are grouped based on purity and/or uranium content. The PuO_2 grouping contains two subsets: high purity PuO_2 standards and pure PuO_2 working standards. The mixed oxide grouping contains two subsets: high purity, highly enriched U-Pu oxide standards and largely pure U-Pu oxide working standards.

All of the plutonium and mixed oxide working standards are packaged in a 9975/3013 configuration and have origins at Rocky Flats Environmental Test Site (RFETS), Hanford Research Site (HRS), or Lawrence Livermore National Laboratory (LLNL). The high purity U-Pu and plutonium oxide standards were made by Los Alamos National Laboratory (LANL) and are in a can-bag-can configuration. For calibration, the pure oxide containers were measured in 9975 containers to mimic a 9975/3013 configuration.

For the shuffler's active response, measurements performed on a combination of the high purity EU-Pu standards and U-Pu working standards were used to quantify the accuracy and repeatability of shuffler HEU measurements in an HEU-Pu oxide matrix. Details for the high purity and working standards are given in Tables 2 and 3.

Table 2 High purity PuO_2 and EU-Pu calibration standards

Standard	Material Type	Total Pu (g)	^{239}Pu wt. (g)	Total U (g)	Enrichment (%)
PuO-1	High Purity PuO_2	1319	1233	-	-
PuO-2		1055	986	-	-
PuO-3		792	741	-	-
PuO-4		528	494	-	-
PuO-5		264	247	-	-
UPu-1	High Purity HEU-Pu	0.1	0.1	1690.6	93.11
UPu-2		43.6	40.9	1646.7	93.11
UPu-3		87.1	81.7	1605.8	93.11
UPu-4		174.5	163.7	1522.8	93.11
UPu-5		348.6	326.9	1351.9	93.11
UPu-6		1308.1	1226.7	422.4	93.08

Table 3 RFETS/HRS/LLNL U-Pu and PuO_2 working standards

Standard	Material Type	Total Pu (g)	^{239}Pu wt. (g)	Total U (g)	Enrichment (%)
$WPuO_2$-1	PuO_2 Working Standards	384.0	303.5	-	-
$WPuO_2$-2		521.0	459.5	-	-
$WPuO_2$-3		935.3	735.0	-	-
$WPuO_2$-4		1713.7	1278.7	-	-
$WPuO_2$-5		2331.7	2185.0	-	-
$WPuO_2$-6		2558.4	2104.8	-	-
$WPuO_2$-7		3935.2	3687.7	-	-
WUPu-1	U-Pu Working Standards	635.0	588.6	1571.0	84.1
WUPu-2		935.0	862.1	3382.8	78.9
WUPu-3		139.0	94.3	3689.5	93.7

Measurements performed on the high purity and working PuO_2 standards served to quantify the active backgrounds from ^{239}Pu delayed neutrons and the passive backgrounds resulting primarily from spontaneous fissions in ^{240}Pu. Passive measurements performed on all of the working standards were used to quantify the accuracy and repeatability of plutonium measurements in both a U-Pu and PuO_2 matrix.

Data Collection

To determine optimal conditions for a high signal-noise ratio, a series of assays were performed using the PuO-1 (1319 g total Pu: 1213 g ^{239}Pu, 80 g ^{240}Pu) and STD PuO-4 (528 g total Pu: 494 g ^{239}Pu, 32 g ^{240}Pu) varying the irradiation time, scan settings, and number of shuffles from 30 – 70. Preceding each assay was a 900 s background count. Statistical analysis of the shuffle-by-shuffle data, summed over all detector banks, indicated the highest signal-to-noise ratio and lowest standard deviation occurred using a 20 s irradiation time, 10 s delayed neutron count time, and at least 65 shuffles, comparable to assay settings determined in other successful shuffler measurements of mixed oxide [12, 13, 14].

Active Response: High Purity and Working Plutonium Oxide Standards

In addition to multiple assays of each high-purity standard, irradiation of each U-Pu standard was modeled using MCNP5/MCNPX. For consistency, all of the standards were modeled using the dimensions of the Hanford convenience can. The measurement and simulation results for each item are given in Table 4. A comparison of the percent difference shows an average of 0.246 ± 1.214 %.

Table 4 Comparison of simulated and measured UPu results

Standard	$DN_{Measured}$ (cps)	$DN_{simulated}$ (cps)
UPu-1	3151.7	3114.0
UPu-2	3036.6	3045.7
UPu-3	2977.3	2955.7
UPu-4	2832.3	2837.2
UPu-5	2582.6	2643.2
UPu-6	1741.9	1737.5
WUPu-1	2152.7	2178.2
WUPu-2	4110.7	3967.3
WUPu-3	5211.9	5267.2

Based on the strong agreement between the simulated and measured results, the isotopes present in each standard were then isolated in the simulation to determine individual delayed neutron contributions. While it is apparent that certain isotopes, such as ^{241}Pu, in large quantities can contribute a significant number of delayed neutrons, ^{235}U and ^{239}Pu are the major contributors to the observed rates. Table 5 lists the cps/gram for ^{235}U and ^{239}Pu for the standards in Table 4, along with the ^{235}U mass. The ^{239}Pu cps/g appears very sensitive to ^{235}U content, varying by 100+ % over the range of measured standards.

Table 5 Simulated Delayed Neutron cps/g for ^{239}Pu and ^{235}U

Standard	DN Rate (cps/g)	DN Rate (cps/g)	^{235}U (g)	^{235}U/^{239}Pu (%)
UPu-1	2.0	-	1574.1	0.0
UPu-2	1.9	1.3	1533.2	2.6
UPu-3	1.9	1.2	1495.2	5.2
UPu-4	1.9	1.1	1417.9	10.4
UPu-5	1.8	0.9	1258.7	20.6
UPu-6	2.0	0.8	393.3	75.7
WUPu-1	1.3	0.7	1321.2	30.8
WUPu-2	1.3	0.6	2667.7	24.4
WUPu-3	1.4	0.8	5122.3	3.43

The following logarithmic relationship

$$DN_{^{239}Pu}(cps/g) = -0.1725\ln(R) + 0.6716 \quad \textbf{(1)}$$

was used to define this observed/simulated behavior for the ^{239}Pu count rate, where $R = m_{^{239}Pu} / \left(m_{^{235}U} + m_{^{239}Pu}\right)$. The per gram counts rate for each of the pure standards, as a function of the ^{239}Pu/^{235}U ratio are shown in Figure 2.

Figure 2 Delay Neutron Response vs U/Pu Ratio

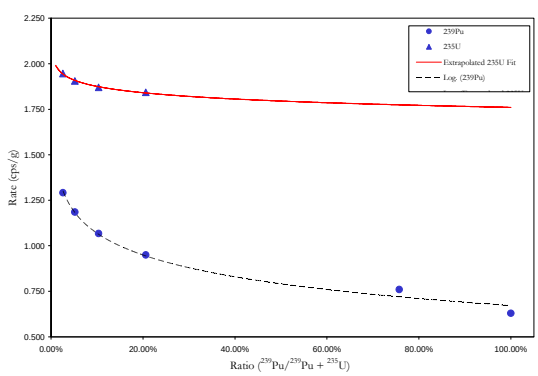

Figure 3 Plutonium Oxide Active Response

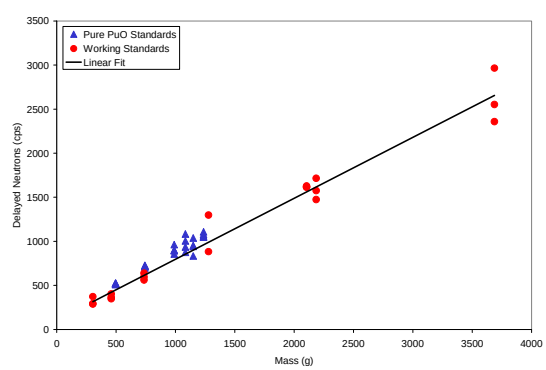

In parallel with simulations, an assessment was made of the active response from ^{239}Pu of each of the high purity and working plutonium oxide standards. Results for these active measurements are given in Figure 3. As shown in Figure 3, the delayed neutron response for ^{239}Pu behaves linearly, increasing with increasing ^{239}Pu mass. The linear relationship between ^{239}Pu mass and the delayed neutron count rate was found to be

$$DN_{^{239}Pu}(cps) = 0.669 m_{^{239}Pu} + 166.054 \quad \textbf{(2)}$$

with an overall standard deviation of 16.025 %. A comparison of the slope of the linear fit with the simulated cps/g at 100% ^{239}Pu shows agreement within less than 0.05 %.

The ^{235}U delayed neutron rate/gram appears far more sensitive to the total ^{235}U mass, i.e. self-shielding, than to the ^{239}Pu content. As shown from the extrapolated curve in Figure 2, the ^{235}U rate varied by roughly 5 cps/g over the mass percentage range. However, Table 5 also shows a 40 % decrease in the count rate when the total fissile mass increases from ~ 1.6 kg to 2.7 kg. Thus, in a limited capacity, the function

(3) $$DN_{^{235}U}(cps/g) = -0.0501\ln(R) + 1.7602$$

where R is defined as above, can be used to determine ^{235}U content. Due to the small number of U_3O_8 standards, the development of a self-shielding correction to the calibration will require further simulation.

As there was only one wholly uranium oxide pure standard, a direct comparison could not be made for a range of ^{235}U masses. However, for the one pure uranium oxide standard (1574.1 g ^{235}U), the measured rate was determined to be approximately 1.97 cps/g, nearly equal to the simulated rate. Based on this agreement, as well as the ^{239}Pu simulated/measured results, it is feasible that a simulated ^{235}U calibration curve is viable for quantifying ^{235}U in oxide where no plutonium is present.

Mass Calculation and Uncertainty

Because of the observed dependence of the delayed neutron count rate/gram on ^{235}U mass and $^{239}Pu/^{235}U$ ratio, two mass calibration functions were developed. The limits of use are determined by the total fissile mass in mixed oxide, i.e. the masses of ^{239}Pu and ^{235}U.

Adjusted Delayed Neutron Count Rate Analysis

To isolate the delayed neutron contribution from ^{235}U, the contributing count rate from ^{239}Pu is calculated using Equation 1, where both *R* and $m_{^{239}Pu}$ are determined from the shipper declaration. The measured delayed neutron count rate is then adjusted for the ^{239}Pu contribution. The ^{235}U content is then determined by solving adjusted count rate by the ^{235}U cps/g, determined from the extrapolated ^{235}U cps/g curve (Equation 3). Thus,

(4) $$m_{235} = \frac{CR_{adj}(cps)}{-0.0501\ln(R) + 1.7602}$$

where $CR_{adj} = CR_{Net} - CR_{^{239}Pu}$. This method has yielded agreement within 3.0 % of declared ^{235}U mass below 1.9 kg, and within 20 % when the ^{239}Pu mass greatly exceeds that of ^{235}U. Application of this method to higher ^{235}U masses will require additional corrections.

Combined Delayed Neutron Count Rate Analysis

In addition to the behavior explicitly determined from simulations, an average response was also observed for each mass regime. This average response assumes completely separable ^{239}Pu and ^{235}U contributions to the total delayed neutron count rate. In this analysis method, the total measured rate is analyzed as a linear combination of contributions from each fissile isotope individually.

Thus, the total rate is defined as

(5) $$CR_{Net} = k_{235} m_{235} + k_{239} m_{239}$$

where $m_{239_{Pu}}$ is determined from the booked values. Two average response curves were developed to cover the low and high ^{235}U mass ranges measured. Table 6 lists the calibration constants for each ^{235}U mass range. The crossover point for these curves is approximately 1.9 kg.

Table 6 Calibration Constants for the Combined Mass Calibration

Mass Range	k_{235}	k_{239}	Average Percent Difference
Low Mass	1.976	0.672	0.000
High Mass	1.399	0.478	-0.002

Application of the low and high mass curves has given agreement within 5 % of the declared ^{235}U up to ~ 4 kg.

Error Analysis

The uncertainty in the ^{235}U mass for each method depends on the net delayed neutron count rate uncertainties, the declared ^{239}Pu mass, the fitting coefficients, and the associated uncertainties of each. All other uncertainties are determined either from shuffler measurements or from material documentation.

In general, an expression for the uncertainty in the ^{235}U mass in mixed oxide depends on both the ^{239}Pu and ^{235}U masses. Thus, the general error expression is written as

(6) $$\sigma^2{}_{CRnet} = \left[\frac{\partial f(m_{239})}{\partial m_{239}}\right]^2 \sigma^2{}_{m239} + \left[\frac{\partial f(m_{235})}{\partial m_{235}}\right]^2 \sigma^2{}_{m235}$$

where *f* and *g* define separable functions of ^{239}Pu and ^{235}U masses respectively. Solving Equation 6 for $\sigma^2{}_{m_{235}}$ and applying the result to Equation 4 gives

(7)

$$\sigma^2{}_{235} = \frac{1}{CR^2{}_{adj}}\left\{\left[\left(\frac{k_{235}\ln R}{CR_{adj}}\right)^2 + \left(\frac{b}{CR_{adj}}\right)^2\right]\sigma^2{}_{CR_{adj}} + \left(\frac{\sigma_b}{CR_{adj}}\right)^2 + \left(\frac{k_{235}}{R\cdot CR_{adj}}\right)^2 \sigma_R{}^2 + \left[\frac{\ln R}{CR_{adj}}\right]^2 \sigma^2{}_{k_{235}}\right\}$$

where the adjusted count rate uncertainty has contributions from the gross count rate uncertainty, the net count rate uncertainty, and uncertainties in the fitting coefficients (k_{235} = -0.0501, b = 1.7602).

Development of the ^{235}U uncertainty in the combined mass analysis method proceeds similarly to that of the adjusted count rate method. Recalling the expression for the combined count rate in Equation 5, the uncertainty is

$$\sigma^2{}_{m_{235}} = \frac{1}{k^2{}_{235}}\left[\sigma^2{}_{CR_{Net}} + k^2{}_{239}\cdot\sigma^2{}_{m_{239}} + m^2{}_{239}\cdot\sigma^2{}_{k_{239}} + \left(\frac{CR^2{}_{Net} + k^2{}_{239}\cdot m^2{}_{239}}{k^2{}_{235}}\right)\sigma^2{}_{k_{235}}\right] \quad \textbf{(8)}$$

where $\sigma^2{}_{CR_{Net}} = \sigma^2{}_{CR_{Gros}s} + \sigma^2{}_{CR_{Background}}$.

The associated uncertainty in the measurement of each count rate will include both a random component, related to random fluctuations in the neutron counting, and a systematic uncertainty, caused by uncontrolled variations in the standard positioning and slight inaccuracies in the calibration. The random and systematic uncertainties (1σ) associated with this calibration were determined to be less than 2 % and 6 % respectively.

Because the standards cover a range of $^{239}Pu/^{235}U$ ratios, the associated precision and accuracy of each measurement will depend on the $^{239}Pu/^{235}U$ ratio. Thus, the applicability of this qualification is limited to the range of material studied.

Results

A measurement method has also been developed to quantify ^{235}U in U_3O_8 oxide and in mixed U-Pu oxide. Given observed measurement dependencies on ^{235}U mass and the relative amounts of ^{239}Pu and ^{235}U in oxide, two independent methods were analyzed. The first adjusted the measured delayed neutron rates for plutonium content and the relative content of each fissile species. The second used observed average response behavior to determine the combined ^{239}Pu and ^{235}U response in mixed oxide. In both cases when ^{235}U was present, the total fissile mass dominates the response behavior at higher masses. Applying high and low mass calibration curves to the average response can compensate for this increasing mass effect.

Functional fits of the delayed neutron count rates were used to quantify the ^{235}U content across a range of standards, with the results used in determining the precision and accuracy of active measurements of ^{235}U in mixed U-Pu oxide. The fits assume the dominant contributors to the delayed neutron rates to be ^{239}Pu and ^{235}U. This assumption was possible because of the relatively small amounts of other isotopes in each container. Items containing significant amounts of these other isotopes (^{241}Pu, ^{233}U, etc.) will require adjustments to the calibration functions.

References

1. Department of Energy Order, DOE M 470.4-6, Change 1, *Nuclear Material Control and Accountability,* August 2006
2. SRS Manual 14Q, *Material Control and Accountability*, Savannah River Site, Aiken, SC 29808
3. D. Dolin, *Qualification of the K-Area Interim Surveillance PG/GIS and 3013-Calorimeter System for Accountability Measurements*, WSRC-TR-2007-00432, Rev. 0, Washington Savannah River Company, Aiken, SC 29808, November 2007
4. S. Kahook, *Accountability Measurements of Oxide Mixtures of Pu and ^{235}U with the KIS PG/GIS and APNMC*, WSRC-TR-2007-00428, Rev. 0, Washington Savannah River Company, Aiken, SC 29808, November 2007
5. S. Kahook and B. Eberhard, *KAMS-NMC Precision and Accuracy for Verification Receipt Measurements of Pu Metals, Pu Oxides, and Mixtures of Pu-U Oxides in 9975 Shipping Containers*, WSRC-TR-2008-00072, Rev. 0, Washington Savannah River Company, Aiken, SC, March 2008
6. N. Menaa and S. Smith, *Neutron Multiplicity Counter Characterization Report for SRNS Cf-252 Shuffler*, Document Number 10000001770, Canberra
7. N. Menaa *et al*, *Factory Acceptance Test Procedure for the SRNS Cf-252 Shuffler*, Document Number 10000000862, Canberra Industries Inc., Meriden, CT, December 2009
8. Richard Smith, *KAC Shuffler Operational Test*, Document Number M-SUTP-K-00002m Savannah River Site, Aiken, SC, July 2010
9. P. Rinard, *Shuffler Instruments for the Nondestructive Assay of Fissile Materials*, LA-12105m Los Alamos National Laboratory, Los Alamos, NM
10. P. Rinard, *Shuffler Assays for Uranium in Mixed-Oxide Fuel with Recycled Weapons Plutonium*, LA-13856-MS, Los Alamos National Laboratory, Los Alamos, NM, September 2001
11. N. Menaa and R. McElroy, *Shuffler Dose Calculations for SRNS Subcontract No.: AC61580A, Shuffler in KAC*, Document Number 10000000540, Canberra Industries Inc., Meriden, CT April 2009
12. M. Mount, W. O'Connell, C. Cochran, P. Rinard, D. Dearborn, E. Endres, *Calibration of the Lawrence Livermore National Laboratory Passive-Active Neutron Drum Shuffler for Measurement of Highly Enriched Uranium Oxide in Mixed Oxide*, UCRL-JC-147775, Lawrence Livermore National Laboratory, Livermore, CA, May 2002
13. M. Mount, W. O'Connell, C. Cochran, P. Rinard, *Calibration Tools for Measurement of Highly Enriched Uranium in Oxide and Mixed Uranium-Plutonium Oxide with a Passive-Active Neutron Drum Shuffler*, UCRL-JC-151547, Lawrence Livermore National Laboratory, Livermore, CA, June 2003
14. W. O'Connell, C. Cochran, M. Mount, *Performance Model for the Lawrence Livermore National Laboratory Passive-Active Neutron Drum Shuffler*, URCL-JC-151437, Lawrence Livermore National Laboratory, Livermore, CA, June 2003