Contract No:

This document was prepared in conjunction with work accomplished under Contract No. DE-AC09-08SR22470 with the U.S. Department of Energy.

Disclaimer:

This work was prepared under an agreement with and funded by the U.S. Government. Neither the U. S. Government or its employees, nor any of its contractors, subcontractors or their employees, makes any express or implied: 1. warranty or assumes any legal liability for the accuracy, completeness, or for the use or results of such use of any information, product, or process disclosed; or 2. representation that such use or results of such use would not infringe privately owned rights; or 3. endorsement or recommendation of any specifically identified commercial product, process, or service. Any views and opinions of authors expressed in this work do not necessarily state or reflect those of the United States Government, or its contractors, or subcontractors.

Using a Containment Vessel Lifting Apparatus for Remote Operations of Shipping Packages

Bradley Loftin and Richard Koenig
Savannah River National Laboratory
PATRAM 2013

ABSTRACT

The 9977 and the 9975 shipping packages are used in various nuclear facilities within the Department of Energy. These shipping packages are often loaded in designated areas with designs using overhead cranes or A-frames with lifting winches. However, there are cases where loading operations must be performed in remote locations where these facility infrastructures do not exist. For these locations, a lifting apparatus has been designed to lift the containment vessels partially out of the package for unloading operations to take place. Additionally, the apparatus allows for loading and closure of the containment vessel and subsequent pre-shipment testing. This paper will address the design of the apparatus and the challenges associated with the design, and it will describe the use of the apparatus.

BACKGROUND AND APPLICATION

The 9977 Shipping Package, Figure 1, was designed to replace the DOT 6M Specification Package. In doing so, it was designed to be user friendly, much like the 6M, but still had to be able to pass the requirements found within 10 CFR 71.73 for the hypothetical accident conditions. The 9975 Shipping Package, Figure 2, has been in service within the Department of Energy (DOE) complex for over 2 decades. The 9975 has been the workhorse for the DOE de-inventory and consolidation efforts by shipping plutonium from DOE sites throughout the country to the Savannah River Site (SRS). The 9975 was designed to meet previous regulations that required double containment of plutonium. The 9975 design is extremely robust, but this attribute presents unique operational issues including: a requirement to lift heavy loads (the 9975 containment vessels (CVs), when nested and fully loaded, weigh more than 120 pounds), vessel closure torques over 100 ft-lbs, and a vertical lift of a minimum of 36.4 inches (0.93 meters) during CV extractions. The 9977 has similar operational challenges although it has only one containment vessel. Shipping package operations are typically performed in facilities with large overhead spaces and equipment available to handle the heights, weights, and torqueing needs. There are instances where the 9975 and the 9977 might be used in environments, such as remote areas, where there are no existing facilities to meet all of these needs. Operations performed in remote locations or in

Figure 1

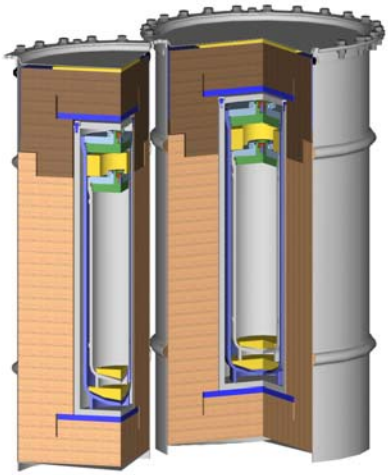

Figure 2

field locations would benefit from the use of a device that is attached to the drum to perform the lifting of the containment vessels in order to easily load and close either of these packages.

DESIGN

The Pantex plant in Amarillo, TX uses the 9977 package for material shipments. One of the concerns at Pantex was introducing new tools and materials into their loading and unloading areas that required large areas for operation as they are space-limited. So, in order to alleviate the space concerns, Pantex designed a lifting device, shown in Figure 3, that attaches to the 9977 drum and has a boom for lifting the containment vessel out of the drum liner. The device also has a clamp mechanism for holding the CV, suspended, allowing for opening, loading, and closing of the CV. The lifting device can be used on other packages as well with the use of adapter plates. An adapter plate was designed to attach the lifting device to the 9975 Shipping Package. The lifting mechanism for the device is a screw housed within the vertical section of the device that when turned raises and lowers the CV.

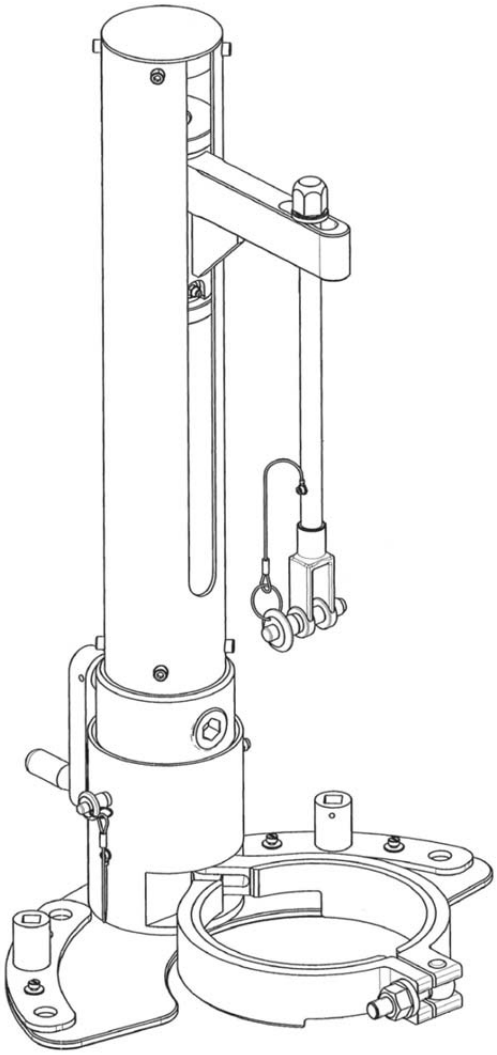

Figure 3

DESIGN CHALLENGES

There were a few challenges which were to be addressed when designing the lifting device. First, the lifting device should be portable and able to be lifted by one or two individuals. The device is constructed out of aluminum which allows it to be lightweight while also providing the structural robustness necessary to lift the CV out of the drum. The design is not too large as it is smaller than the drum in each dimension and thus can be transported along with drums to locations that cannot accommodate other lifting equipment. The design also has very few moving parts and is thus expected to last for as long as the drums may last with very little required maintenance. The utilization of the screw within the design provides a static safety-stop by using friction and gravity to prevent the CV from falling back into the drum. Additionally, the clamp that holds the CV in place had to be designed to provide the force for anti-rotation when closing the CV to the required torque. The design uses rubber on the inside of the clamp providing the necessary friction that prevents the CV from rotating during torqueing.

OPERATION OF THE DEVICE

The operation of the lifting device is quite simple. Once it is attached to a drum the boom is lowered into place in order to pick up the CV using approved rigging tools. Figure 4 shows the lifting device attached to a 9975 utilizing the adapter plate.

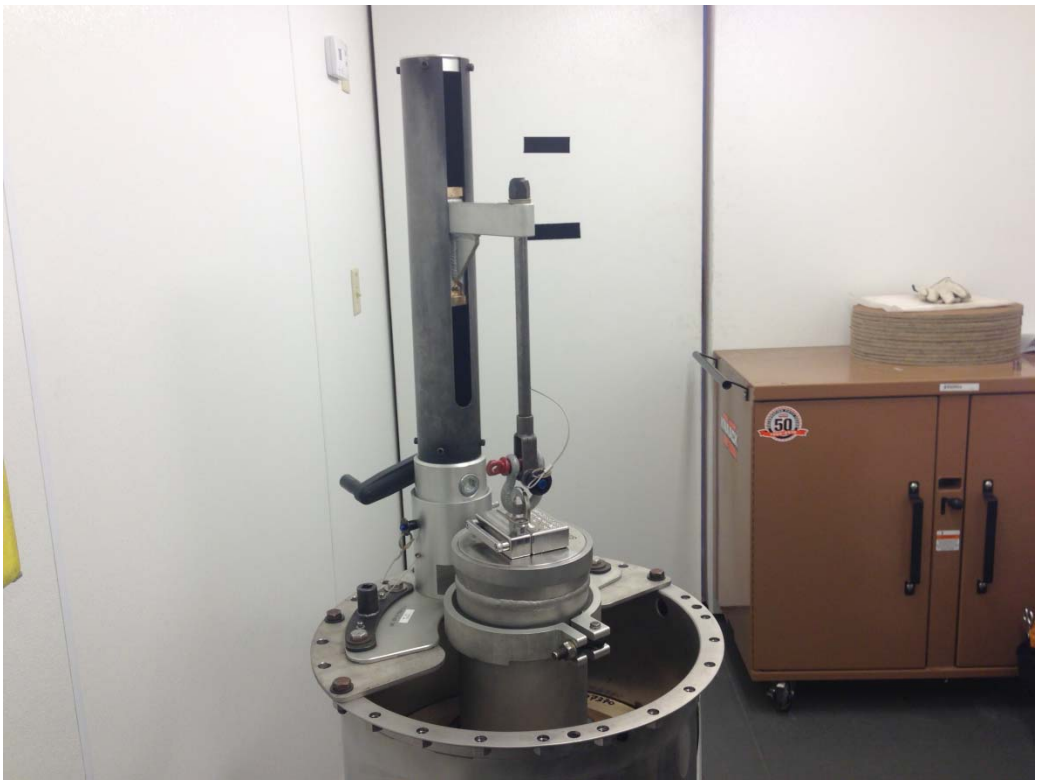

Figure 4

Once the CV is attached to the boom it is raised and tightened within the clamp on the device (also seen in Figure 4). The rigging is removed and the boom is then rotated 90° in order to allow for loading/unloading of the CV. In the case of the 9975, the lid on the outer CV, called the Secondary Containment Vessel (SCV) is only slightly loosened and then the boom is rotated back into place, the rigging is reattached, and the SCV is lowered. For the 9977 the CV lid is completely removed and loading/unloading can take place. For the 9975, once the SCV has been lowered back into the drum, the SCV lid is removed and the rigging is attached to the top of the Primary Containment Vessel (PCV). The PCV is raised up to the clamp and using adapters the clamp holds the PCV in place (Figure 5). The PCV lid is then removed and the loading/unloading can take place (Figure 6). Once the PCV is loaded, a post load leakage rate test is performed on the CV while it is still in position. After a successful test, the steps are reversed and the PCV is lowered back into the drum, the SCV is raised, a leakage rate test is performed on the SCV, the SCV is lowered, and the lifting device is removed from the drum.

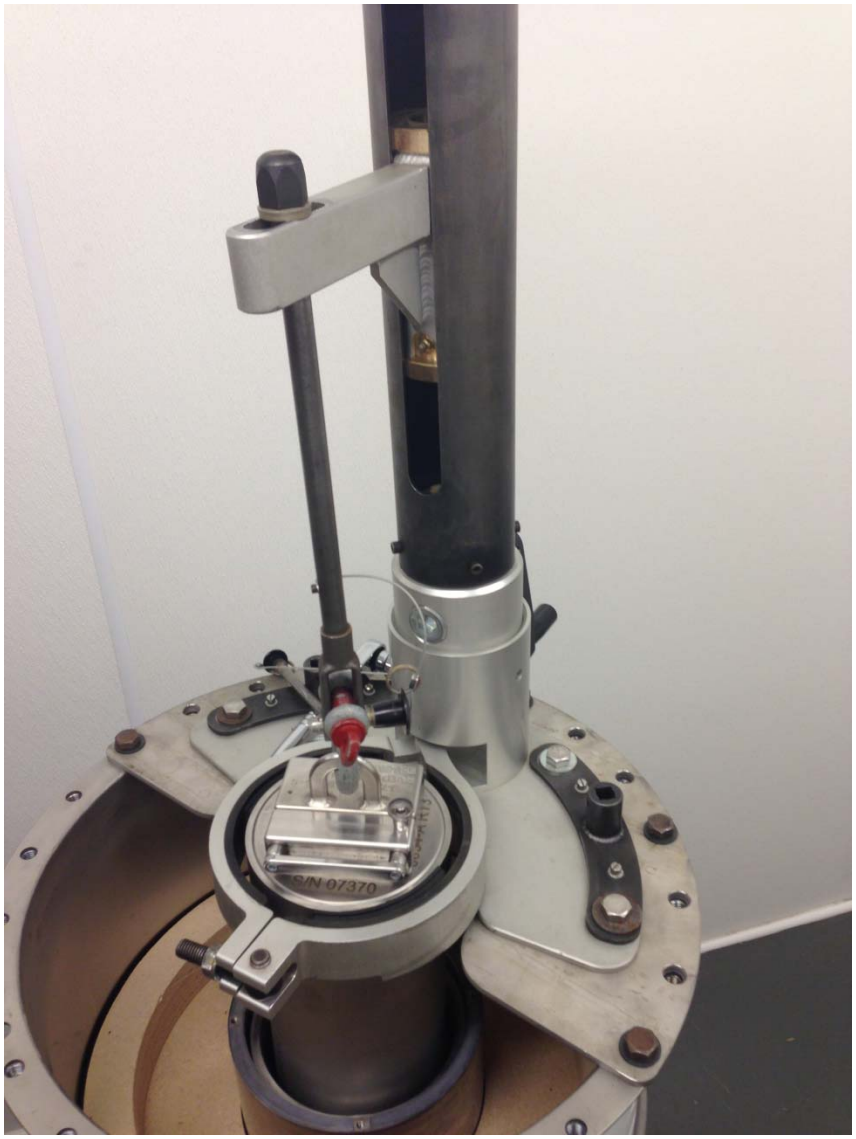

Figure 5

Figure 6

SUMMARY AND CONCLUSIONS

The design of the lifting device was completed in order to allow Pantex to perform the loading of a 9977 in place within their facility. The design has applications that give the device more flexibility than it was designed for by allowing it to be used in remote locations where large lifting tools and rigging is not available and it is adaptable for placement on other drum designs. The device is easy to use, portable, lightweight, and robust. Additionally, as an added benefit, use of the lifting device is ergonomically advantageous for the worker.