Contract No. and Disclaimer:

This manuscript has been authored by Savannah River Nuclear Solutions, LLC under Contract No. DE-AC09-08SR22470 with the U.S. Department of Energy. The United States Government retains and the publisher, by accepting this article for publication, acknowledges that the United States Government retains a non-exclusive, paid-up, irrevocable, worldwide license to publish or reproduce the published form of this work, or allow others to do so, for United States Government purposes.

Corrosion Control Measures for Liquid Radioactive Waste Storage Tanks at the Savannah River Site

B. J. Wiersma and K. H. Subramanian

Abstract

The Savannah River Site has stored radioactive wastes in large, underground, carbon steel tanks for approximately 60 years. An assessment of potential degradation mechanisms determined that the tanks may be vulnerable to nitrate- induced pitting corrosion and stress corrosion cracking. Controls on the solution chemistry and temperature of the wastes are in place to mitigate these mechanisms. These controls are based upon a series of experiments performed using simulated solutions on materials used for construction of the tanks. The technical bases and evolution of these controls is presented in this paper.

Introduction

Liquid radioactive wastes from the Savannah River Site (SRS) separation process [1] are stored in large underground carbon steel tanks. The high level wastes will be processed in several of the tanks and then transferred by piping to other site facilities for further processing before they are stabilized in a vitrified or grout waste form. Based on waste removal and processing schedules, many of the tanks, will be required to be in service for times exceeding the initial intended life (i.e., greater than 60 years). Until the waste is removed from storage, transferred, and processed, the materials and structures of the tanks must maintain a confinement function by providing a barrier to the environment and by maintaining acceptable structural stability during design basis events, which include loadings from both normal service and abnormal (e.g., earthquake) conditions. A corrosion control program is in place to mitigate potential corrosion mechanisms and thereby maintain the structural and leak integrity functions of these waste tanks throughout their intended service life. This paper provides a brief introduction to the waste tank design and fabrication, the waste composition, possible corrosion degradation mechanisms, and the technical basis for the control scheme that is used to manage the integrity of the tanks and provide secure containment.

Waste Tank Fabrication and Design

SRS has three types of Double Shell Tanks (DSTs) that are currently in service, identified as Types I, II, and III. The Types I and II tanks were made of ASTM A285 steel during the 1950s and 1960s. The Type III tanks were made of ASTM A516/A537 steel during the 1960s and 1970s.

Type I and II Tanks.

Type I and Type II waste tanks were made of ASTM Type A285-50T, Grade B steel, with the nominal composition shown in Table 1. The tanks were fabricated from semi-killed, hot-rolled plate material.

Table 1. ASTM Requirements for Chemical Composition
for A285-50T, Grade B Firebox Quality.

	Composition, %			
	Cmax	Mnmax	Pmax	Smax
For plates ≤ 1.91-cm (0.75-in.) thickness	**0.2***	**0.8**	**0.035**	**0.04**

*** C = 0.22 wt.% for plate of 1.91-cm (0.75-in.) < thickness ≤ 5.08 cm (2-in.).**

Type I tanks (shown in Figure 1) have a nominal capacity of 750,000 gallons, are 22.86 m (75 ft) in diameter, and 7.47-m (24.5-ft) high. The primary tanks are a closed cylindrical tank with flat top and bottom constructed from 1.27-cm- (0.5-in.-) thick steel plate. The top and bottom are joined to the cylindrical sidewall by curved knuckle plates. Type II tanks (shown in Figure 2) have a capacity of 1,030,000 gallons, are 25.91 m (85 ft) in diameter, and 8.23 m (27 ft) high. The primary container for Type II tanks consists of two concentric steel cylinders assembled with a flat bottom and flat top forming a doughnut. The top and bottom are joined to the outer cylinder by rings of curved knuckle plates. Single-butt girth welds join each of the plates in both, Type I and Type II waste tanks. The tanks are constructed with a top weld to the top of the tank, middle welds between plates, and bottom welds to the bottom of the plate. A 1.52-m (5-ft) high steel pan provides partial secondary containment for the tanks and a concrete vault encompassing the primary tank and the steel pan provides another barrier before waste can reach the ground. Neither Type I nor Type II waste tanks were stress relieved after fabrication.

Figure 1. Type I High Level Waste Tank Schematic.

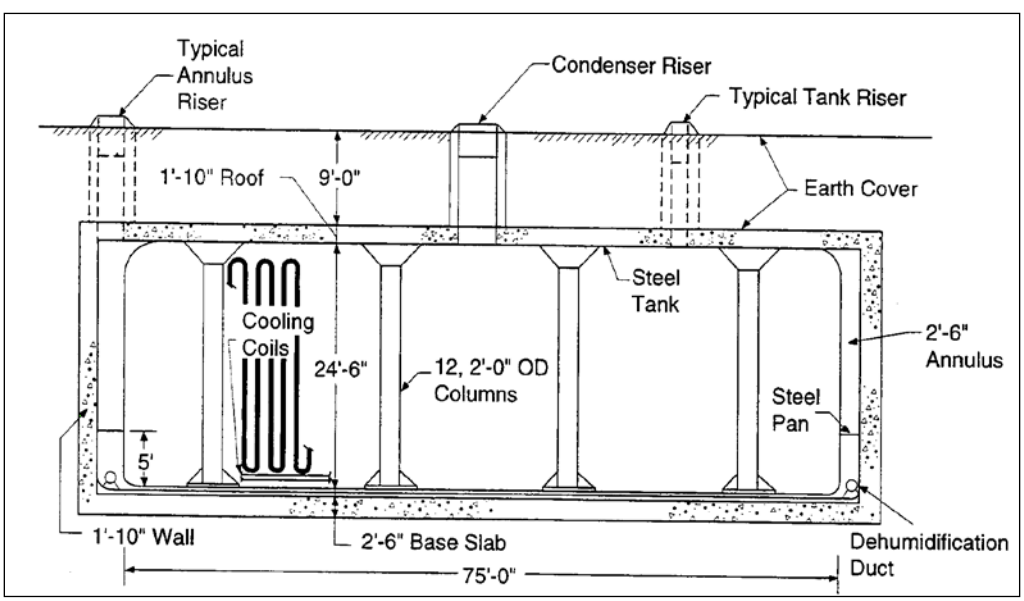

Figure 2. Type II High Level Waste Tank Schematic.

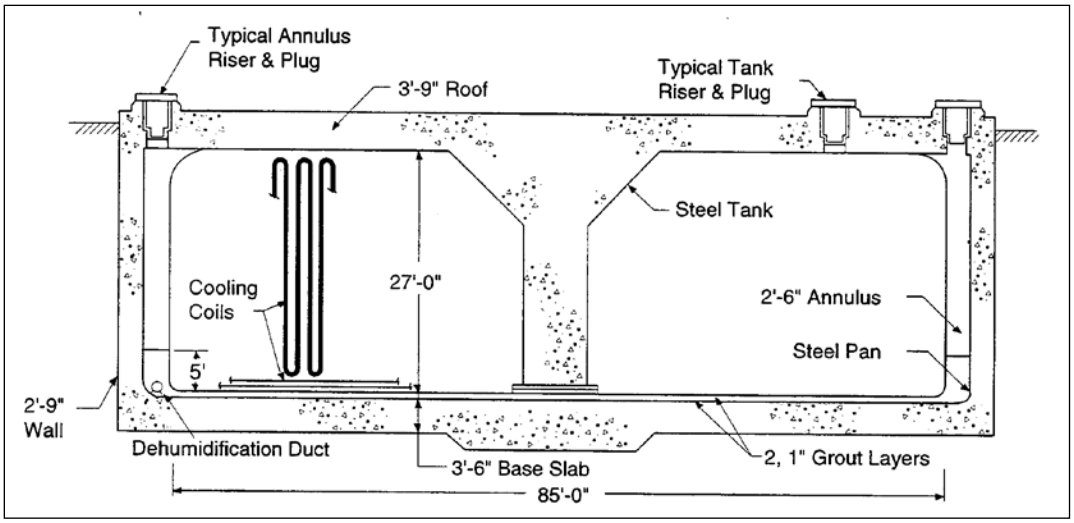

Type III Tanks.

The most recently constructed tanks, designated Type III, were built from hot-rolled ASTM A516-Grade 70 or hot-rolled ASTM537-CL.1 normalized steel. The normalizing heat treatment (analogous to annealing) optimizes notch toughness and hence increases resistance to brittle fracture. The nominal compositions according to ASTM Standards are shown in Table 2.

Table 2. Nominal Compositions of A516-70 and A537-Cl.1.

Steel Specification	C_{max} (wt%)		Mn_{max} (wt%)		P_{max} (wt%)	S_{max} (wt%)
A516 – Grade 70	thickness ≤ 1.27 cm (0.5 in.)	0.27	0.6-0.9		0.035	0.035
	0.5 < thickness 0.51 cm (≤0.2 in.)	0.28	0.6-1.2		0.035	0.035
A537 – Class 1	0.24		thickness ≤ 3.81 cm (1.5 in.)	0.7-1.35	0.035	0.035

Each tank (as shown in Figure 3) is 25.9 m (85 ft) in diameter and 10.06-m (33-ft) high with a capacity of 1,300,000 gallons. Type III tanks have a toroidal shape similar to the Type II design. Each primary vessel is made of two concentric cylinders joined to washer-shaped top and bottom plates by curved knuckle plates. The secondary vessel is 27.43 m (90 ft) in diameter and 10.06-m (33-ft) high (i.e., the full height of the primary tank) and is made of 0.95-cm- (0.375-in.-) thick steel.

Figure 3. Type III High Level Waste Tank Schematic.

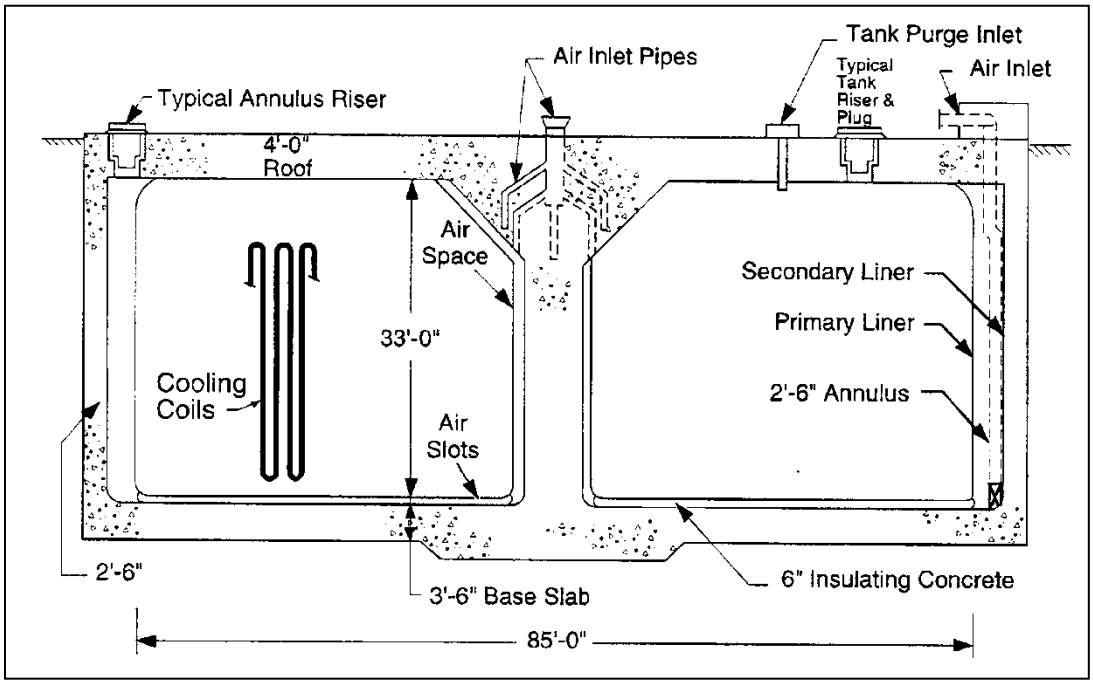

The primary tank sits on a 15.24-cm (6-in.) bed of insulating concrete within the secondary containment vessel. The concrete bed is grooved radially so that ventilating air can flow from the inner annulus to the outer annulus. Any liquid leaking from the tank bottom or center annulus wall would move through the slots and would be detected at the outer annulus.

The secondary vessel is 1.52 m (5 ft) larger in diameter than the primary vessel, with an outer annulus 0.76 m (2.5 ft) wide. The secondary vessel is made of 0.95-cm (0.375-in.) steel throughout. Its sidewalls rise to the full height of the primary tank. The nested two-vessel assembly is surrounded by a cylindrical reinforced concrete enclosure with a 76.2-cm (30-in.) wall. The enclosure has a 121.92-cm- (48-in.-) flat-reinforced concrete roof, which is supported by the concrete wall, and a central column that fits within the inner cylinder of the secondary vessel.

Each Type III primary tank was stress-relieved in place after all burning, cutting, welding, and other high-temperature work below the liquid fill line had been completed. Full stress relief at 1100 °F (593 °C) was accomplished in accordance with the general requirements of the ASME Boiler and Pressure Vessel code [2].

Waste Chemistry

Most of the high-level wastes are products of the PUREX and enriched uranium (HM) processes [3]. In the PUREX process, plutonium and uranium are recovered from irradiated natural and depleted uranium. In the HM process, uranium enriched in ^{235}U and ^{236}U is recovered from irradiated uranium fuel for reuse. Each recovery process produces a characteristic waste. However, generalization of waste compositions in storage tanks based on flowsheet or process analysis is complicated because during processing and storage the wastes are blended and evaporated, salts and insoluble solids precipitate, and radiation induces changes in the composition.

The waste that is stored in the SRS tanks may be classified into two broad general categories, high heat waste (HHW) and low heat waste (LHW), which are defined by their rate of heat generation. The majority of the HHW is a byproduct of the PUREX (primary process in the F-Area separations canyon) and the HM or enriched uranium (primary process in the H-Area separations canyon) processes. A majority of the LHW are also byproducts of these processes. However, other processes and facilities such as resin regeneration, decontamination, and laboratories also contribute significant quantities of LHW. A third category of wastes includes processed wastes (PW), which result from the removal of waste from tanks that are being prepared for closure. The waste is being prepared as feed for either the Defense Waste Processing Facility (DWPF) where it is vitrified or the Saltstone facility where it is blended and immobilized within a grout mixture.

Both HHW and LHW are present in three waste form phases: supernate, sludge, and salt cake. The supernate is a multicomponent aqueous mixture of soluble sodium salts. The primary salts present are sodium nitrate, sodium hydroxide and sodium nitrite. Sludge is a gel-like substance which consists of approximately 20 vol. % insoluble solids and 80 vol. % entrapped supernate [4]. The insoluble solids consist of oxides and hydroxides of iron, aluminum and manganese oxides and hydroxides that precipitated from the caustic solution and have settled to the tank bottom. The insoluble solids also contain small amounts of uranium, plutonium and longer lived fission products, which supply a significant quantity of decay heat. Therefore temperatures are greater in the sludge than the other two waste forms. Salt cake contains approximately 78 vol. % salt crystals, which form after the evaporated supernate is cooled, and 22 vol % interstitial concentrated supernate (i.e., high hydroxide concentration) [5]. The PW is present primarily in two forms: supernate or sludge. Whether these wastes are stored or processed, the supernate, which contains dissolved aggressive anions, is the most corrosive of these waste forms. However, during waste removal operations, salt dissolution [6] and sludge slurrying [7] will form an aqueous phase which may result in a potentially corrosive condition.

The waste compositions exhibit variability from tank-to-tank, depending on the detailed history of transfers in and out of the tank. In addition to transfers, the waste "ages" over time and this results in changes in the chemical and radionuclide composition. The major changes are:

1) Radiolytic conversion of NO_3^- to NO_2^-;
2) Absorption of CO_2 from air, converting NaOH to Na_2CO_3;

3) Evaporation of supernates;
4) Separation of radionuclides into soluble and insoluble fractions;
5) Decay of radionuclides.

The first three changes occur in the supernate and are significant from a corrosion perspective. Nitrate is an aggressive species and promotes both stress corrosion cracking and pitting corrosion in carbon steel. Nitrite on the other hand is a corrosion inhibitor. Thus, as the waste ages, the more aggressive component has been depleting, while the inhibitor species increases. Absorption of CO_2 from air, on the other hand results in depletion of hydroxide which acts as a corrosion inhibitor [8]. However, this inhibitor depletion mechanism can be managed by transfers from other tanks that contain higher hydroxide concentrations. Water is removed from the supernate as it is transferred through a continuous evaporator. The concentrate from the evaporator is transferred to a tank with cooling coils. In the tank, the salts crystallize and settle as the liquid cools. The remaining supernate is returned to the evaporator for further concentration. The process continues until the liquid has been converted to a damp salt cake that consists primarily of sodium nitrate crystals and a concentrated supernate. The supernate composition during evaporation changes because the ratio of hydroxide to nitrate increasesdue to the high solubility of sodium hydroxide. Thus, the supernate chemistry in tanks that receive evaporator concentrate becomes more benign towards the carbon steel as evaporation continues.

Concentration ranges of the major components in the current supernates are shown in Table 3. Studies have shown the measured chemistry within a given tank may show differences of 50 to 60 % in the concentration of a chemical species [9]. These differences are attributed to the non-homogeneity of the waste and analytical error. Given this variability, the tanks are operated such that the inhibitor concentrations in the supernate are maintained 50 % above the minimum levels required to inhibit corrosion.

Table 3. Concentration Range of Major Constituents in the Waste Supernate

Constituent	Concentration Range (M)
Na^+	< 0.5 - 15
NO_3^-	0.11 - 4.2
NO_2^-	0.09 - 3.2
$Al(OH)_4^-$	< 0.3 - 1.6
OH^-	0.12 – 12.2
$CO_3^=$	< 0.1 - 0.45

The objective of waste processing is to prepare feed for the vitrification and grout facilities. The carbon steel tanks will be utilized to dissolve aluminum, wash sludge and dissolve salt cake. The goal of the aluminum dissolution stage is to add sodium hydroxide until approximately 75 percent of the aluminum in the sludge is dissolved. The expected conditions during aluminum dissolution are shown in Table 4. If these solutions were pure NaOH at these concentrations, carbon steel may be susceptible to hydroxide stress corrosion cracking [10]. However, laboratory testing has shown that at these conditions this mechanism is unlikely [11-13] because of the presence of other chemical species.

Table 4. Environmental Conditions during Aluminum Dissolution.

Temperature	60-100 °C
NaOH	3.0-8.0 M
$NaNO_3$	0.02-2.0 M
$NaNO_2$	0.005-0.5 M
$NaAlO_2$	0.0-1.0 M

The objective of the sludge washing was to remove the soluble salts and Cs-137 from the sludge. The goal was to reduce the soluble salts to less than 2 % of the sludge on a dry weight basis. This washing process is carried out in 13 stages. The expected sludge supernate concentration at selected wash stages is shown in Table 5 [14]. The steady state pH is the assumed pH in the wetted film region above the liquid/vapor interface. At the lower pH values, carbon steel tanks may become susceptible to pitting as the inhibitors are diluted or depleted. The sodium nitrite concentration shown in the table is the minimum value at a temperature of 50° C. The solution is evaluated by mass balance or sampled at the end of each washing stage to determine if sufficient inhibitor is present to prevent pit initiation. If not, sodium nitrite is added to the solution to prevent pit initiation.

Temperature is also an important parameter affecting corrosion response. Due to fission products in the sludge layer, the temperature in the sludge is generally higher than in any other waste form. The maximum temperatures in the sludge for “fresh” waste (i.e., within the first two years) was typically between 100 and 150 °C. Temperature in the sludge region is maintained by auxiliary cooling coils, and in the case of the Type III tanks air-cooled slots beneath the tanks. Although, the auxiliary cooling does not preclude a local “hot spot”, a majority of the decay heat is removed. Temperatures in the sludge have decreased over the decades due to the decay-induced decrease of the radionuclides. Sludge temperatures are currently less than 60 °C.

Table 5. Approximate Molar Concentrations of Sludge Constituents at Selected Wash Steps.

Component	Unwashed Sludge	4th Wash Step	9th Wash Step	13th Wash Step
$NaNO_3$	1.44	0.388	0.076	0.02
Na_2SO_4	0.095	0.026	0.005	0.0014
NaCl	0.022	0.0059	0.0012	0.00031
$NaNO_2$	0.0-0.432	0-1.65	0.0-0.324	0.0-0.085
NaOH	0.144-0.576	0.0-1.0	0.0-1.0	0.0-1.0
Steady State pH	10.28	10.06	9.79	9.51

Corrosion Degradation Mechanisms

General Corrosion

General corrosion or uniform corrosion refers to corrosion by an electrochemical reaction that proceeds uniformly over the entire exposed surface or over a large area. Although this is an active mechanism, it rarely leads to failure of industrial components. The literature indicates that at normal temperatures (72-104 °F [22-40 °C]) in the pH range 4.5 to 9.5 in nitrate-free solutions [15-16]the tank steel will initially experience a uniform corrosion rate of 10 to 15 mpy near the surface of steel. The surface of steel, in aqueous solutions such as these, is always in contact with an alkaline saturated solution of hydrous ferrous oxide (pH = ~ 9.5) which significantly reduces the corrosion rate. Although the ferrous oxide (FeO) is porous in this pH range, further corrosion is limited by the rate at which oxygen can diffuse through the oxide layer.

Further increase in alkalinity to levels normally expected in the DSTs (pH = 11-13) makes the steel passive by decreasing the permeability of the corrosion product layer and also decreasing the surface reaction rate. This, in turn, will decrease the steel corrosion rate to very low levels (<<1 mpy). In nitrate containing solutions, such as those present in the DSTs, the main products formed by corrosion are magnetite (Fe_3O_4) and nitrite ions. The following reactions are expected for general corrosion:

The net anodic reaction at the metal/film interface is

$$3/4\ Fe = 1/4\ Fe_{film}^{2+} + 1/2\ Fe_{film}^{3+} + 2\ e^- \qquad (1)$$

and the net cathodic reaction at the film/solution interface is

$$NO_{3sol}^{-} + 2\ e^{-} = NO_2^{-} + O_{film}^{2-} \quad (2)$$

The measurement methods routinely used for general corrosion are traditional weight loss technique using coupons immersed in simulated wastes in the laboratory or in-tank measurement with in-situ coupons. The general corrosion rates can also be calculated from UT thickness measurements. Although corrosion rates were calculated for the tanks on which the first set of UT thickness measurements were made, the calculated rates were not very accurate because there is no record of the starting thicknesses of the tank wall plates. Therefore, more reliable corrosion rates can only be obtained at the conclusion of the second set of measurements on the DSTs, which are currently in progress.

From a general corrosion mechanism perspective, all tank surfaces undergo general corrosion, however, the 1.27-cm- (0.5-in.-) thick vertical tank wall region typically exceeds the minimum wall thickness requirements of the ASME Boiler &Pressure Vessel Code, Section VIII, Div. 2 , Alternative Rules [17].

Pitting

Pitting is a localized form of corrosion which occurs on passivated metallic materials exposed to aggressive environments [18]. Pitting requires the breakdown of the passive film on the alloy and subsequent anodic dissolution of the metal. Once the pits are initiated, an aggressive environment quite different from the bulk solution may develops within the pit and rapid autocatalytic growth may occur.

Pitting is a morphologically broad identification. Fontana and Green [18] have described pitting as part of a continuum of corrosion appearances from broad and shallow to narrow and deep. Aspect ratios (width to depth) as high as six have been arbitrarily set for dividing pitting from "localized" general corrosion. Iron and carbon steels are not as strongly passivated as aluminum and stainless steels and ferrous ions don not hydrolyze as strongly as aluminum or chromium ions. As a result, pits in iron and carbon steel tends to be of higher aspect ratios.

The net anodic reaction and the net cathodic reaction that occur during pitting of carbon steel in nitrate solutions have generally been accepted to be the following.

The net anodic reaction is:

$$\tfrac{3}{4}\ Fe + H_2O = \tfrac{1}{4}\ Fe_3O_4 + 2\ H^{+} + 2\ e^{-} \quad (3)$$

and the net cathodic reaction is:

$$NO_3^{-} + H_2O + 2\ e^{-} = NO_2^{-} + 2\ OH^{-} \quad (4)$$

On the basis of these reactions, if the electrode surfaces are separated, for example, if the anode is the bottom of a pit and the cathode is the wall of the pit, the anode becomes more acidic and the cathode

more basic. Once a pit begins to propagate, the conditions that develop are such that further pit growth is promoted. The conditions within the pit become significantly different than those in the bulk solution.

Because of the uncertainties in predicting the growth rate of the deepest pits, pitting control measures often depend upon the establishment of conditions under which pits do not initiate. Mitigating actions include inhibiting the bulk solution or selecting more resistant materials. Research efforts at SRS have focused on determining inhibitor levels that will prevent pit initiation.

Pitting is a viable corrosion mechanism in the regions of the tanks exposed to liquid and sludge if the wastes are deficient in inhibitors. Furthermore, if there is the possibility of condensation under conditions of inadequate ventilation flow rates and high humidity above waste surface in the tank, pitting corrosion of the carbon steel primary wall in the dome space is a viable mechanism. The pit growth rates in the vapor space will be comparable to those recorded in the literature for atmospheric aqueous corrosion.

Crevice/pitting attack of waste tank cooling coils from extremely diluted sludge washing solutions was observed at the SRS [6]. However, the SRS in-service inspection program indicates that no significant pitting attack of the tank walls has occurred [19]. Pitting corrosion is not expected in the liquid and sludge regions of the tank if the waste is compliant with the waste chemistry and temperature controls.

Stress Corrosion Cracking

SCC is an environmentally assisted cracking of engineering materials through crack initiation and propagation as a result of the combined and synergistic interaction of tensile stress and a corrosive environment [20]. The tensile stresses required to cause SCC are usually below the macroscopic yield stress. The stresses can be applied, but residual tensile stresses often provide the necessary stress component for SCC failures.

Corrosion reactions that occur during SCC of carbon steel in nitrate solutions are the same as those that occur during pitting. In the case of SCC, however, the anode is the tip of a crack and the cathode is the wall of the crack. Since the cathodic reaction takes place on the walls of the crack on the metal surface, and the anodic reaction takes place at the crack tip, the H^+ and the OH^- do not react. However, the crack tip may become acidic due to the hydrolysis of the ferrous ion by the following reaction:

$$Fe^{2+} + H_2O = Fe(OH)^+ + H^+ \qquad (5)$$

The acidic crack tip leads to a more anodic open circuit potential and stimulation of the cathodic reactions. This leads to more aggressive crack growth.

Cracks are initiated at carbon present in solid solution or as iron carbides (Fe_3C) at the grain boundaries. The carbon acts as an efficient cathode with the adjacent metal surface acting as the anode. Cracks propagate along the grain boundaries of a material as the tensile stress maintains a crevice in which the solution remains aggressive towards the metal. The corrosion rate is influenced by the nitrate

reduction kinetics and diffusion of reactants to cathodic sites [21]. Nitrate is more easily reduced as the solution becomes more acidic. Work at the Naval Research Laboratory has shown that during cracking the solution at the crack tip has approximately a pH of 3 even when the bulk solution is highly basic [22].

The propagation of nitrate stress corrosion cracking in mild steel can be controlled by the anodic dissolution rate at the crack tip or the time necessary for the oxide film to rupture. The controlling mechanism was determined by measuring the activation energies for continuous crack growth (typical of anodic dissolution) and discontinuous crack growth (typical of oxide film rupture or crack growth by fracture). The activation energy for nitrate SCC is reported to be 27 kJ/mol for continuous crack growth as measured in wedge opening loaded (WOL) specimens, and 56 kJ/mol for discontinuous crack growth as measured with compact tension specimens (CT). [23] Typically, the initiation time for continuous crack growth can be controlled by the time it takes for formation of oxides along the grain boundaries, or for the crack tip chemistry to become aggressive. The activation energy for discontinuous crack growth is
typical of oxygen diffusion in grain boundaries or the oxide-metal interface. Ultimately, the activation energies indicate that nitrate SCC is controlled by anodic dissolution in specimens with decreasing stress intensity, and by fracture of grain boundary oxide in specimens with increasing stress intensity.

The waste solutions contain anions which can both cause or inhibit SCC. Nitrate or hydroxide may initiate SCC, however, the presence of either will inhibit cracking by the other. Nitrite which is present in the waste will also inhibit SCC [24]. Electrochemical polarization studies were performed to determine nitrate or hydroxide cause the observed stress corrosion cracking. The studies showed that carbon steels are susceptible to nitrate SCC in potential ranges between -0.3 to 1.1 V vs. SCE, while hydroxide SCC occurs at potentials between -0.8 V to -1.0 V vs. SCE [25]. Open circuit potential measurements were performed in several waste tanks and the potentials varied between -0.44 to -0.064 V. Thus, it is most likely that the nitrate ion was responsible for inducing the SCC in the SRS waste tanks.

Eleven tanks that were not stress-relieved developed through-wall cracks at the SRS. Small surface cracks were observed perpendicular to the butt welds and extending through the heat-affected zone before stopping shortly after penetrating the base metal [26]. No loss of containment has been observed in the newer stress-relieved tanks (i.e., Type III design). In addition, no cracks were observed in the Type III tanks examined recently by the in-service inspection program [19].

Waste Chemistry and Temperature Controls

Waste chemistry control is one of the means by which corrosion degradation of the waste tanks is minimized at SRS. Chemistry controls are based on in-situ coupon tests, waste tank experience, and laboratory testing. Laboratory testing has had a significant role in determining corrosion mechanisms, identifying the aggressive species, and determining the inhibitor concentration and temperature requirements necessary to prevent corrosion. These requirements comprise the technical standards for corrosion control [27]. The standards are utilized then as guidelines for operational procedures.

Since the beginning of operations at SRS chemistry controls have existed to minimize corrosion of the tanks. Initially, the controls consisted primarily of neutralizing the waste in the separations area by addition of sodium hydroxide prior to storage in the tanks and maintaining the temperature of the waste below the boiling point with the use of internal cooling coils [28]. In 1962, after cracks had been discovered in four of the tanks, corrosion standards for the waste stored in the tanks were developed [28]. The temperature limits were 55° C in the supernate and 150° C in the sludge. The minimum pH of the supernate was to be 8 while the maximum sodium hydroxide concentration in the waste stream sent to the tanks was to be 6 wt %. The former restriction ensured that the waste was alkaline and the latter prevented excess sodium hydroxide which may lead to caustic stress corrosion cracking. Finally the organic material content in the waste streams sent to the tanks was limited to 0.5 wt %. Radiolytic decomposition of the organic material in the waste produces carbon dioxide which depletes the hydroxide and may result in localized regions where the tanks are uninhibited.

In the 1970's extensive experimental work was performed to develop inhibitor and temperature requirements which would prevent the initiation of nitrate-induced stress corrosion cracking [29]. The main indicator used to determine the susceptibility of carbon steel to SCC is based on ductility (total elongation) contour maps and with 13% total elongation during slow strain rate tensile testing selected as a figure of merit [29]. The 13% limit on total elongation was chosen as a figure of merit for SCC because samples always showed evidence of secondary cracking along the gage length if the ductility was at or below 13% total elongation. At greater elongations, such cracking was unusual and always minor. The contour maps were developed from the results of two statistically-designed SSRT test series on ASTM 285-B carbon steel specimens exposed to various temperatures (122-212 °F [50-100 °C]) and molar concentrations of nitrate (1.5 to 5.5 M), nitrite (0 to 3.5 M), and hydroxide (0 to 5.0 M). The application of the ASTM A285-B elongation contour maps to the behavior of the ASTM A515 and A537 carbon steels of the four DSTs of interest is considered conservative because ASTM A285 steel appears to be more susceptible to SCC [29]. The inhibitor levels for stored wastes were a function of the nitrate concentration in the supernate and the maximum allowable temperatures were the boiling point for concentrated and aged wastes and 70° C for fresh wastes received recently from the separations facility. These requirements were in effect in 1977.

In the early 1980's during salt removal operations, new operating conditions were experienced. Higher nitrate concentrations occurred in the re-dissolved salt solution than had been experienced during waste storage. Experimental work determined the maximum temperature (70° C) and the inhibitor requirements for these higher nitrate concentrations [30]. Revisions to the technical standards were made in 1984 to accommodate these results.

In the middle to late 1980's, with the prospect of future waste processing operations, nitrate induce pitting in dilute wastes became a concern. Experimental work was performed to determine the required inhibitor levels for wastes during aluminum dissolution and sludge dissolution [31]. In summary, if the hydroxide concentration is greater than 1 M pits will not initiate. However, if the hydroxide concentration is less than 1 M, sodium nitrite is utilized to prevent pit initiation. The amount of sodium nitrite necessary depends on the nitrate concentration and the temperature of the waste. The wastes from the two processes also require different nitrite inhibitor levels due to differences in the waste. The

corrosion controls were revised in 1992 to reflect these results.

The inhibitor concentration limits are organized and listed in Table 6 by nitrate concentration range. The hydroxide and nitrite concentration limits address nitrate-induced corrosion in the concentration range 0.02 M to 8.5 M nitrate in five steps, labeled L1 to L5, as shown in Figure 4. Limits L1, L2, and L3 cover the range 1 M to 8.5 M and specify the minimum hydroxide concentration and the minimum sum of the hydroxide and nitrite concentrations that are required to prevent stress corrosion cracking. Limits L4 and L5 cover nitrate concentrations below 1 M and specifically address pitting corrosion.

Table 6. Inhibitor Requirements for Corrosion Control

Applicability	Limit		Parameter	Minimum Needed	Units
5.5M < $[NO_3^-] \leq$ 8.5M	1		$[OH^-]$	0.6	Molar
			$[OH^-] + [NO_2^-]$	1.1	Molar
2.75M < $[NO_3^-] \leq$ 5.5M	2		$[OH^-]$	0.3	Molar
			$[OH^-] + [NO_2^-]$	1.1	Molar
1.0M $\leq [NO_3^-] \leq$ 2.75M	3		$[OH^-]$	$0.1[NO_3^-]$	Molar
			$[OH^-] + [NO_2^-]$	$0.4[NO_3^-]$	Molar
0.02M < $[NO_3^-]$ < 1.0M AND $[OH^-]$ < 1.0M	4	4a	$[OH^-]$	1.0	Molar
			OR		
		4b	$[NO_2^-]$	$0.038*[NO_3^-]*10^{1.64}$	Molar
		4c	AND $[NO_2^-]$	$6.11*10^{[1.64+1.34*\log[Cl-]]}$	Molar
		4d	AND $[NO_2^-]$	$0.04*10^{[1.64+0.84*\log[SO4-2]]}$	Molar
		4e	AND pH	10.3	pH
$[NO_3^-] \leq$ 0.02 M AND $[OH^-]$ < 1.0 M	5	5a	$[OH^-]$	1.0	Molar
			OR		
		5b	$[NO_2^-]$ (if $[Cl^-]$& $[SO_4^{-2}]$ is not known)	0.033	Molar
			OR		
		5c	$[NO_2^-]$	$0.038*[NO_3^-]*10^{1.64}$	Molar
		5d	AND $[NO_2^-]$	$6.11*10^{[1.64+1.34*\log[Cl-]]}$	Molar
		5e	AND $[NO_2^-]$	$0.04*10^{[1.64+0.84*\log[SO4-2]]}$	Molar
		5f	AND pH	10.3	pH
Influents to waste tanks from other areas on site.			pH	9.5	pH

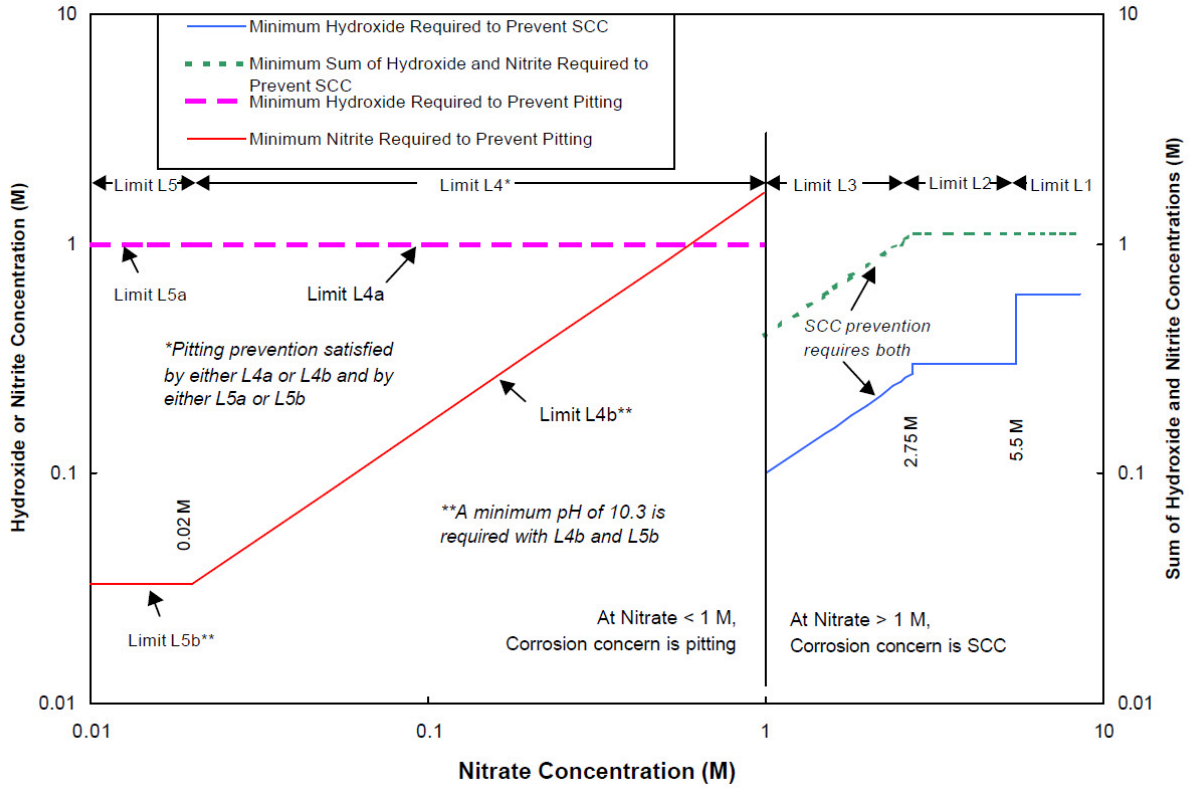

Figure 4. Corrosion Control Limits as a Function of Nitrate Concentration.

<u>Limit L1: 5.5 M < [NO3-] ≤ 8.5 M</u>

Limit L1 defines inhibitor requirements to prevent stress corrosion cracking and is based upon experimental results of crack propagation tests with wedge-opening-loaded (WOL) specimens of A285 Grade B carbon steel in the temperature range of 35 °C to 75 °C and the nitrate concentration range 5.5 to 8.5 M. [30] The dependent variable in these tests was the presence or absence of growth of a pre-formed crack after the immersion of the specimen in the test environment. The results were statistically analyzed to produce a plot of the probability of crack growth as a function of the hydroxide and nitrite concentrations. The probability of crack growth was found to be independent of the temperature and the nitrate concentration over the range studied. Figure 5 shows the graph of the probability of crack growth, from 0 to 1, at the given nitrite and hydroxide concentrations. The region of zero-probability of crack growth in the lower right portion of the graph is the desired operating region, and it is conservatively bounded by a minimum of 0.6 M hydroxide and a minimum of 0.5 M nitrite. Increasing the hydroxide concentration above 0.6 M allows the decreasing of the nitrite concentration while maintaining zero-probability, such that a minimum hydroxide and nitrite concentration sum of 1.1 M is specified, as shown in Figure 4. A maximum temperature of 70 °C is applied to Limit L1.

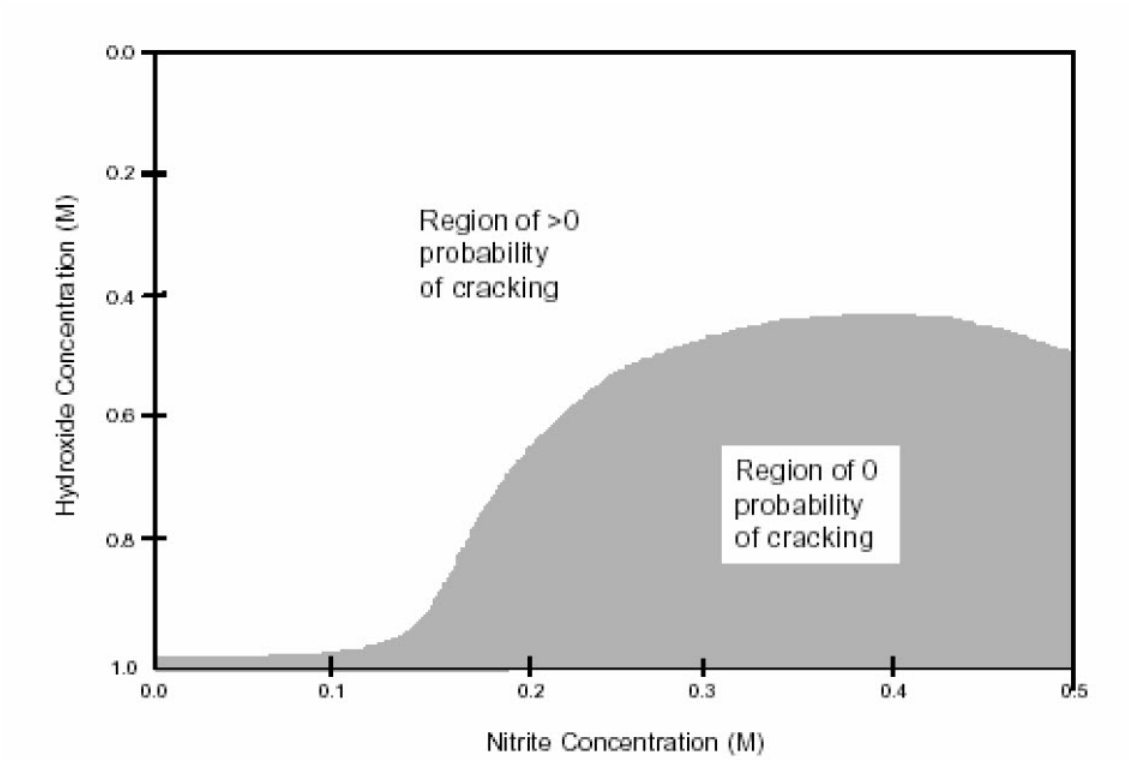

Figure 5 Probability of Crack Growth as a Function of Nitrite and Hydroxide Concentration [30]

Limit L2: 2.75 M < [NO3-] ≤ 5.5M

Limit L2 also specifies the nitrate concentration ranges encountered in on- going waste receipt, storage, and evaporation operations. Wastes subject to L2 are typically those that are aged or partially evaporated. The primary corrosion mechanism identified in this chemistry range is nitrate-induced stress corrosion cracking (SCC). Pitting has not been observed in wastes containing > 1 M nitrate, because these wastes contain high hydroxide concentrations, which prevent this form of localized corrosion.

Limit L2 identifies the inhibitor requirements to prevent SCC and specifies a minimum hydroxide concentration of 0.3 M along with a minimum sum of the hydroxide and nitrite concentrations of 1.1 M for nitrate in the range 2.75 to 5.5 M. Limit L2 is based on the results of slow-strain-rate tensile tests in the range 1.5 to 5.5 M nitrate and on WOL tests at 5 M nitrate, both on A285 Grade B carbon steel. [29] Figure 6 shows WOL data points, representing the presence or absence of crack growth from A285 tests, along with supporting data from newer waste tank steels A516 and A537 used in the SRS Type III and IIIA tanks and data from a Battelle Columbus Laboratories study [32-34]. Figure 6 also shows a curve representing the hydroxide and nitrite concentrations that satisfy the criterion for the onset of stress corrosion cracking, as determined by the slow-strain-rate tensile (SSRT) tests. The SSRT tests were concluded to reveal the presence of stress corrosion cracking when the specimen's total elongation to failure fell below 13%. The elongation to failure was modeled as a second-order polynomial in the nitrate, nitrite, and hydroxide concentrations and the temperature.

Figure 6 also shows the combinations of hydroxide and nitrite concentrations that solve this polynomial at 95 °C at 13% elongation (i.e., region A). Limit L2 carries a maximum temperature of 105°C, or 112°C if the sum of hydroxide and nitrite concentrations exceeds twice the nitrate concentration.

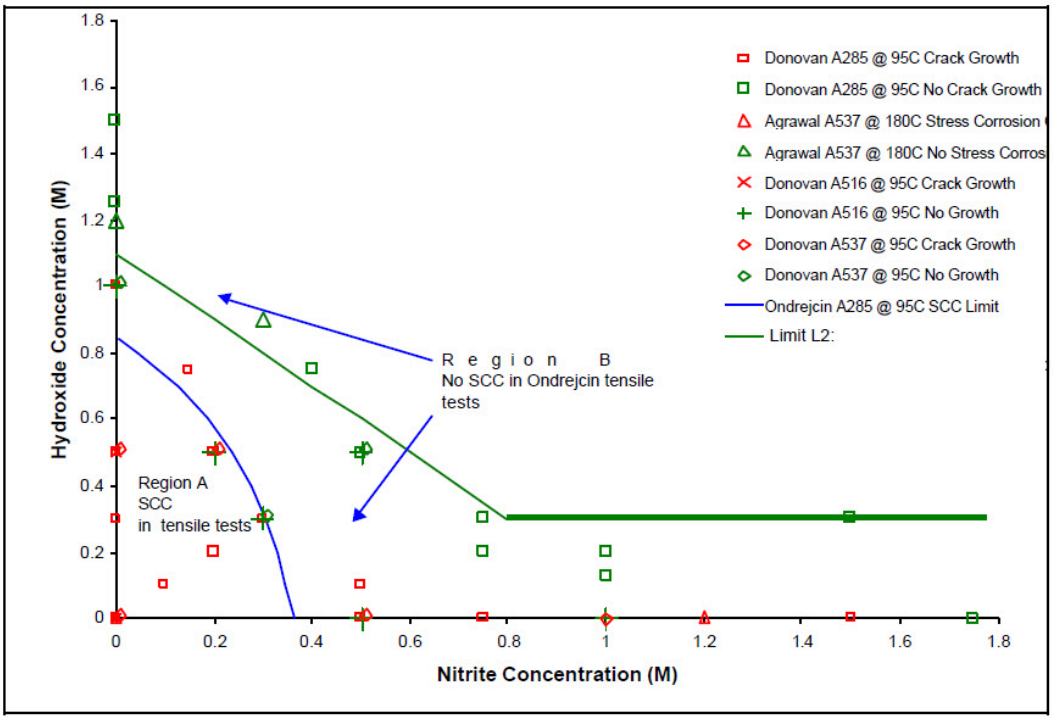

Figure 6: Corrosion Control Limit L2 with Supporting SCC Data for ASTM A285, A516, A537 Steels in 5M Sodium Nitrate [32-34].

<u>Limit L3: 1 M < [NO3-] ≤ 2.75 M</u>

Limit L3 addresses the nitrate range that is typical of fresh waste, historically received from nuclear reprocessing operations at SRS. The limit is specified to prevent nitrate-induced stress corrosion cracking. The Limit L3 is based on an engineering judgment, historical experience of waste tank corrosion prevention, and the previously mentioned SSRT test data. A minimum hydroxide concentration of 0.1 M was conservatively selected to maintain inhibiting conditions in 1M nitrate waste solutions. The minimum hydroxide concentration and the minimum sum of hydroxide and nitrite in L3 over the range 1 M nitrate to 2.75 M nitrate were selected to transition smoothly to the L2 limit at 2.75 M nitrate (see Figure 4). Limit L3 carries a maximum temperature of 70 °C, or 105 °C if the sum of hydroxide and nitrite concentrations exceeds twice the nitrate concentration.

<u>Limit L4: 0.02 M < [NO3-] < 1.0 M and Limit L5: [NO3-] < 0.02 M</u>

Limits L4 and L5 apply to dilute waste solutions, i.e. solutions with a nitrate concentration < 1M,

where nitrate- induced pitting, chloride- induced pitting, and sulfate-induced pitting are the corrosion mechanisms of concern. Pitting has not been observed in wastes containing > 1 M nitrate, because these wastes contain high hydroxide concentrations, which prevent this form of localized corrosion. Stress corrosion cracking is not a concern in waste solutions with < 1 M nitrate, based on the historical experience of SRS waste tanks. Tanks subject to the L4 and L5 limits are those that prepare waste for transfer to the waste vitrification facility and those that store dilute low-heat wastes. Pitting may be prevented by either a minimum hydroxide concentration or by a minimum nitrite concentration along with a minimum pH. Limit L4a specifies the minimum hydroxide concentration of 1 M and is based on the historical experience of the absence of pitting for hydroxide concentrations greater than 1 M. Limit L4b specifies the minimum nitrite concentration required to prevent pitting over the 0.02 to 1 M nitrate concentration range at 40 °C. Limit L4 is based on the results of electrochemical polarization scans and coupon immersion tests [31]. A least squares fit of the relevant nitrate concentration and test temperature to the minimum nitrite concentration established by the polarization scans at temperatures of 23, 30, 40, 50, and 60 °C forms the basis. Figure 8 and Figure 9 show the data at 40°C and 30°C with the L4b limit. Limit L4b incorporates a safety factor of 1.5 on the required nitrite concentration that was selected based on engineering judgment. Nitrite inhibition is allowed by Limit L4b (and L5b) only up to 40°C; higher temperatures require the application of L4a (and L5a), to which a maximum temperature of 100°C applies. The addition of the L5 limits sets a lower bound on the required nitrite concentration independent of the nitrate concentration. Limits L4 and L5 also contain experimentally determined minimum nitrite limits for chloride and sulfate containing solutions, which are also known to be able to induce pitting in carbon steel [35]. In the event that the nitrate anion is in low concentration and is not the principal corrosive anion, minimum nitrite levels can be calculated based upon the chloride or sulfate concentrations. The greatest nitrite concentration based on nitrate, chloride, or sulfate becomes the controlling limit.

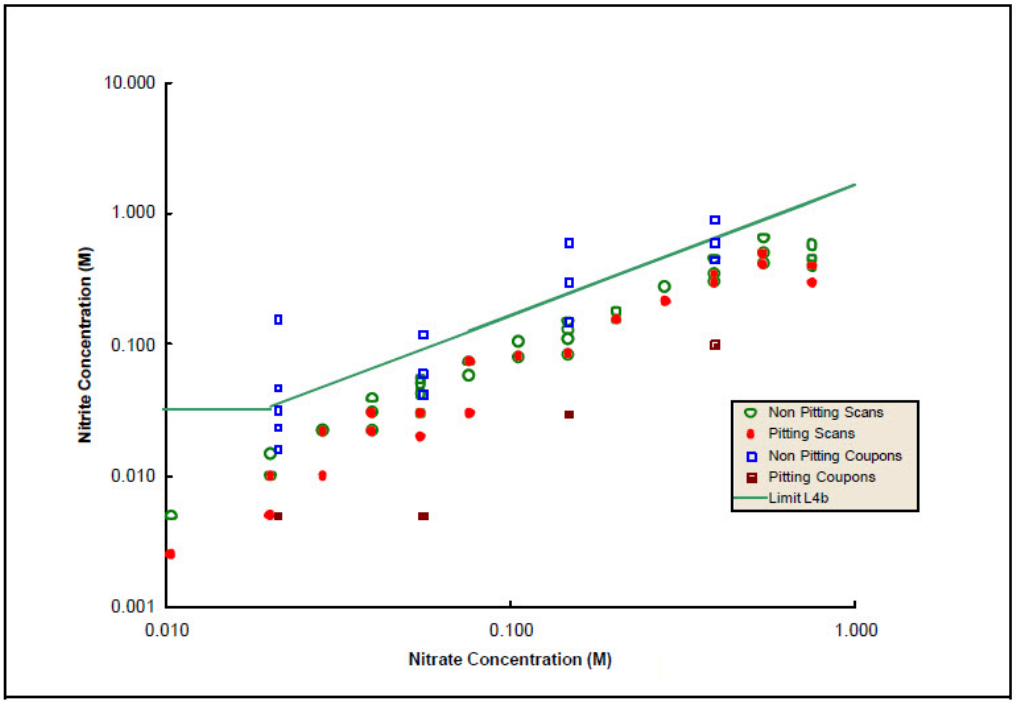

Figure 8: Corrosion Control Limits L4b and L5b with Supporting Data at 40 °C [31].

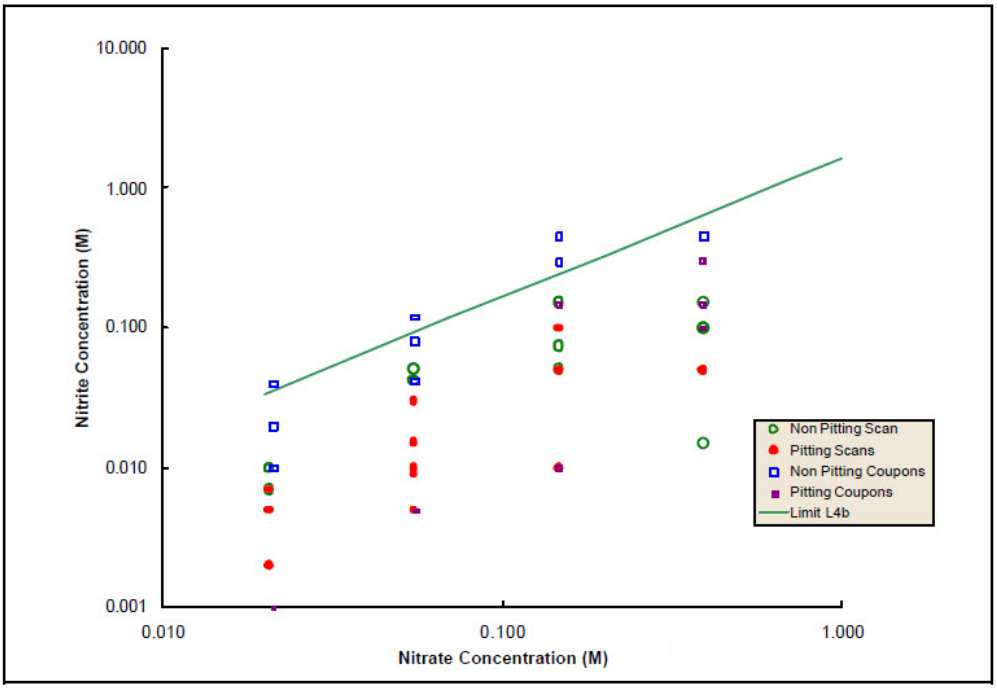

Figure 9: Corrosion Control Limits L4b and L5b with Supporting Data at 30°C [31].

Waste Chemistry Monitoring

Samples of the waste supernate are removed on a periodic basis to ensure that the waste chemistry control limits are not being exceeded. The frequency of sampling depends on the function of the tank and the activity level of the tank. Active tanks receive inter-tank transfers on an annual frequency at minimum, while inactive tanks have not received a transfer in over a year. The sample frequencies in Table 7 are set based on a statistical analysis of the historical corrosion chemistry sample data of the tanks in each category [36] and on an understanding of mechanisms that may change the concentrations of either aggressive or inhibitor species (e.g., hydroxide depletion) [8].

Table 7. Sampling frequency for Waste Tank Chemistry Monitoring.

Status	Category	Inhibitor Levels	Frequency
ACTIVE WASTE TANKS	Evaporator Feed And Drop Tanks	$[NO_3^-] < 1M$ or $[OH^-] < 2.35M$ or $[S] < 3M$	90 days
		$[NO_3^-] \geq 1M$ or $[OH^-] \geq 2.35M$ or $[S] \geq 3M$	180 days
	Fresh Canyon Waste Receiver with Nitrate Concentration Greater Than or Equal to 1M	$[OH^-] < 3M$ or $[S] < 4M$	180 days
		$[OH^-] \geq 3M$ or $[S] \geq 4M$	365 days
	Receiver with Nitrate Concentration Less Than 1M	$[NO2^-]/[NO3^-] < 3.4$ or $[OH^-] < 0.02M$	90 days
		$3.4 \leq [NO2^-]/[NO3^-] < 4.8$ and $0.02M \leq [OH^-] < 2.35M$	180 days
		$[NO2^-]/[NO3^-] \geq 4.8$ or $[OH^-] \geq 2.35M$	365 days
	Receiver with Nitrate Concentration Greater Than or Equal to 1M	$[OH^-] < 2.35M$ or $[S] < 3M$	180 days
		$2.35M \leq [OH^-] < 3M$ and $3M \leq [S] < 4M$	365 days
		$[OH^-] \geq 3M$ or $[S] \geq 4M$	730 days
INACTIVE WASTE TANKS	Nitrate Concentration Less Than 1M	$[NO_2^-]/[NO_3^-] < 3.4$ or $[OH^-] < 0.02M$	180 days
		$3.4 \leq [NO_2^-]/[NO_3^-] < 4.8$ and $0.02M \leq [OH^-] < 2.35M$	365 days
		$[NO_2^-]/[NO_3^-] \geq 4.8$ or $[OH^-] \geq 2.35M$	730 days
	Nitrate Concentration Greater Than or	$[OH^-] < 2.35M$ or $[S] < 3M$	365 days
		$2.35M \leq [OH^-] < 3M$ and $3M \leq [S] < 4M$	730 days
		$[OH^-] \geq 3M$ or $[S] \geq 4M$	1460 days

	Equal to 1M		

$S = [OH^-] + [NO_2^-]$

Active Tanks

Evaporator Feed and Drop Tanks

The sample frequency for active evaporator feed and drop tanks does not exceed 180 days. The relatively frequent transfers into these tanks from several different sources (canyons, DWPF, etc.) may result in significant changes in the soultion chemistry that need to be trended to assure corrosion control is maintained. Models for hydroxide depletion indicate that for dilute solutions (i.e., nitrate concentration is less than 1 molar) the hydroxide concentration can deplete to the steady state pH level of 9.5-10.3 within 3 to 180 days [8]. Therefore tanks with these composition ranges shall be sampled every 90 days. Models for hydroxide depletion in tanks with concentrated wastes (nitrate greater than 1 molar and hydroxide greater than or equal to 2.35 molar) indicate that at high hydroxide concentrations will take more than 5 years to attain the steady state pH level [8]. Therefore a 180-day sample frequency that will monitor changes in the chemistry due to waste transfers will be sufficient for the more concentrated wastes.

Fresh Canyon Waste Receiver with Nitrate Concentration Greater Than or Equal to 1 Molar

Fresh canyon waste receivers are considered to be special case waste receivers. Previous service history show that these tanks, in addition to having relatively lower inhibitor concentrations compared to other waste receivers, also historically have higher temperatures. The higher temperatures result in a greater susceptibility to corrosion degradation mechanisms. Therefore, the sample frequency shall not exceed 365 Days. If the hydroxide concentration is less than 3 M, or the total inhibitor concentration is less than 4 M, the tanks will be sampled on a 180-day frequency.

Receivers with Nitrate Concentration Less Than 1 Molar

The ratio of the concentration of nitrate to nitrite typically determines whether dilute wastes are within corrosion chemistry limits. The hydroxide depletion models were reviewed to confirm that these frequencies were adequate. If the hydroxide concentration is less than 2.35 M, depletion models indicate that the steady state pH may be attained within a year [8]. Therefore the 90 and 180-day frequencies are justified. On the other hand, if the hydroxide concentration was greater than 2.35 M, it will take more than 5 years to attain the steady state pH. Therefore, the 365-day frequency is justified.

Dilute wastes may also be inhibited with 1 molar sodium hydroxide per Table 6. An exception to these frequencies may occur at very dilute solutions (i.e., nitrate concentrations on the order of 0.01 M). If the chloride or sulfate species becomes the aggressive species rather than the nitrate, the sample frequency will be 90 days. Which species is aggressive can be determined by calculating the minimum nitrite level for each of these species and then determining which species requires the maximum amount of nitrite. The equations for the minimum nitrite calculations are shown in Table 6. The nitrate will be the most

aggressive species except in some rare cases of dilute waste where chloride or sulfate may become the most aggressive species [35].

Receivers with Nitrate Concentration Greater Than or Equal to 1 Molar

Inhibition of concentrated wastes (nitrate greater than or equal to 1 molar) is achieved with a minimum hydroxide concentration and the combination of hydroxide and nitrite concentrations (see Table 6). Statistical analysis of the sample data was utilized to determine the frequencies based on the risk of being outside the corrosion chemistry controls [36]. The hydroxide depletion models were reviewed to confirm that these frequencies were adequate. If the hydroxide concentration is less than 2.35 M, depletion models suggest that the steady state pH may be attained within a year. Therefore 180 days is an adequate sample frequency. For hydroxide concentrations greater than or equal to 2.35 M, the steady state pH level will not be attained for more than 5 years [8]. Therefore these tanks may be sampled on a 365 day or 730 day basis as determined by Table 7.

Inactive Tanks

Receivers with Nitrate Concentration Less Than 1 Molar

Inactive tanks have not received any transfers for over 365 days. Thus any change in the supernate chemistry would be due to hydroxide depletion. The ratio of the concentration of nitrate to nitrite typically determines whether dilute wastes are within corrosion chemistry limits. The statistical analysis of the historical sample data was utilized to establish the frequencies shown in Table 7. The hydroxide depletion models were reviewed to confirm that these frequencies were adequate. If the hydroxide concentration is less than 2.35 M, depletion models indicate that the steady state pH may be attained within a year [8]. Given that there are no transfers into the tank within a year, the 180 and 365-day frequencies are justified. On the other hand, if the hydroxide concentration was greater than 2.35 M, it will take more than 5 years to attain the steady state pH. Therefore, the 730-day frequency is justified. Dilute wastes may also be inhibited with 1 molar sodium hydroxide per Table 6. An exception to these frequencies may occur at very dilute solutions (i.e., nitrate concentrations on the order of 0.01 M) where chloride or sulfate may become the primary aggressive species. If the chloride or sulfate species becomes the aggressive species rather than the nitrate, the sample frequency will be 90 days.

Receivers with Nitrate Concentration Greater Than or Equal to 1 Molar

Inactive tanks have not received any transfers for over 365 days. Thus any change in the supernate chemistry would be due to hydroxide depletion. Inhibition of concentrated wastes (nitrate greater than or equal to 1 molar) is achieved with a minimum hydroxide concentration and the combination of hydroxide and nitrite concentrations (see Table 6).

Statistical analysis of the sample data was utilized to determine the frequencies based on the risk of being outside the corrosion chemistry controls [36]. The hydroxide depletion models were reviewed to confirm that these frequencies were adequate. If the hydroxide concentration is less than 2.35 M, depletion models suggest that the steady state pH may be attained within a year. Given that there have

not been any transfers into this tank for over a year, 365 Days is an adequate sample frequency. For hydroxide concentrations greater than or equal to 2.35 M the steady state pH level will not be attained for over 5 years [8]. Therefore these tanks are sampled on a 730 or 1460-day basis.

Summary

Liquid radioactive waste has been stored in large, underground, carbon steel tanks for approximately 60 years at the Savannah River Site. Effective utilization of chemistry and temperature controls has been used to mitigate localized corrosion due to the presence of the aggressive nitrate species. These chemistry and temperature controls are based on decades of research at the Savannah River National Laboratory and have been verified by no loss of containment from tanks that have been managed by these controls for their entire service life. The facility continues to verify the effectiveness of these controls via waste sampling, temperature monitoring and ultrasonic inspections.

References

1. J. I. Mickalonis, “Liquid Waste Legacy”, this issue.
2. L. P. Costas, M. L. Holzworth, and W. C. Rion, "Stress Corrosion Cracking of Carbon Steels in Simulated Waste Solutions", DP-1023, June 1966.
3. R. S. Ondrejcin, S. P. Rideout, and J. A. Donovan "Control of Stress Corrosion Cracking in Storage Tanks Containing Radioactive Waste", **Nuclear Technology, 44 (7)**, 297 (1979).
4. D. T. Hobbs, "Supernatant Liquid Sampling in Waste Tanks (U)", WSRC-RP-92-1179, September 23, 1992.
5. J. R. Fowler, "Composition of F-Area Soluble High-Level Waste", DPST-82-390, March 10, 1982.
6. A. Q. Goslen, "Tank 19 Salt Removal", DPSP-84-17-7, August 1986.
7. R. S. Ondrejcin, "Investigation of Cooling Coil Corrosion in Radioactive-Waste Storage Tanks", DP-1425, January 1977.
8. D. T. Hobbs and R. M. Wallace, “Hydroxide Depletion in Waste Storage Tanks by Reaction with Carbon Dioxide”, DPST-85-846, October 14, 1985.
9. J. A. Pike, "ITP Precipitate Washing: Sample Variability in Tank Chemistry Samples (U)", WER-WME-920665, May 13, 1992.
10. J. E. Reinoehl and W. E. Berry, "Natural Conditions for Caustic Cracking of a Mild Steel", **Corrosion, 28 (4)**, 151 (1972).
11. J. D. Fritz, "Control of Stress Corrosion Cracking During DWPF In-Tank Alumina Dissolution", DPST-88-252, January 25, 1988.
12. J. D. Fritz, "Susceptibiliy of Waste Tanks to Stress Corrosion Cracking From DWPF In-Tank Alumina Dissolution", DPST-88-310, February 8, 1988.
13. J. D. Fritz, "Open Circuit Potentials During DWPF In-Tank Alumina Dissolution", DPST-88-392, March 9, 1988.
14. P. E. Zapp, "Electrochemical Study of Corrosion Inhibition During Sludge Washing", DPST-88-399, March 14, 1988.
15. The Corrosion Handbook, Ed. H. H. Uhlig, John Wiley and Sons, New York, 1948.
16. Uhlig’s Corrosion Handbook, Ed. R. Winston Revie, John Wiley and Sons, New York, 2000.

17. V. N. Chaudhari, “Stress Evaluation of Type I Tank”, T-CLC-H-00395, March 1999.
18. N. D. Greene and M. G. Fontana, "A Critical Analysis of Pitting Corrosion", **Corrosion, 15**, 41 (1959).
19. J. B. Elder, “Tank Inspection NDE Results for Fiscal Year 2010, Waste Tanks 30, 31, and 32”, SRNL-STI-2010-00533, September 30, 2010.
20. D. A. Jones, Principles and Prevention of Corrosion, Macmillan Publishing Co., New York, 1992.
21. R. A. Legault, S. Mori, and H. P. Leckie, “An Electrochemical Statistical Study of the Effect of Chemical Environment on the Corrosion Behavior of Mild Steel”, Corrosion, 6, 1980, p. 121.
22. G. Sandox, C. T. Fujii, and B. F. Brown, Corrosion Science, Vol. 10, 1970, p. 839.
23. J. A. Donovan, “Temperature Dependence of Nitrate Stress Corrosion Cracking”, DP-MS-77-25, October, 1977.
24. J. A. Donovan, " Factors Controlling Nitrate Cracking of Mild Steel", in **Proc. Conf. Environmental Degradation of Engineering Materials**, Blacksburg, Virginia, October 1977.
25. R. S. Ondrejcin, “A Stress Corrosion Cracking Test with Slow Strain Rate and Constant Current”, ASTM Symp. Stress Corrosion Cracking, held May 1977, Toronto, Canada.
26. B. J. Wiersma and J. B. Elder, “A Structural Assessment of Flaws Detected During Ultrasonic Examination of Tank 15”, SRNS-STI-2008-00028, August 2008.
27. DPSTS-241, "Technical Standard: Waste Tank Farms", March 1977.
28. W. P. Bebbington, "New Technical Standards for the Storage of Radioactive Liquid Wastes", DPSP-62-1225, March 13, 1962.
29. R. S. Ondrejcin, "Prediction of Stress Corrosion of Carbon Steel by Nuclear Process Liquid Wastes", DP-1478, August 1978.
30. R. S. Ondrejcin, "Salt Removal Compositional Limits - Suggested Technical Standard for Types I, II, and IV Nuclear Waste Tanks", DPST-83-533, July 25, 1983.
31. P. E. Zapp, "Minimum Nitrite Concentration for Washed Sludge", WSRC-TR-90-512, November 2, 1990.
32. J. A. Donovan, "Materials Aspects of SRP Waste Storage - Corrosion and Mechanical Failure", DP-1476, November 1977.
33. J. A. Donovan and R. S. Ondrejcin to A. A. Kishbaugh, "Relative Resistance to Nitrate Cracking of A537 Class I and A516 Grade 70 Normalized Steels", March 23, 1977.
34. A. K. Agrawal, W. N. Stiegelmeyer, and W. E. Berry, "Stress Corrosion Cracking Evaluation of ASTM A537 in Simulated Radioactive Waste Solution at 180° C" Battelle Columbus Laboratories, January 19, 1983.
35. P. E. Zapp, "Recommended Nitrite Limits for Chloride and Sulfate in ESP Slurries", WSRC-TR-94-0250, June 6, 1994.
36. P. Hill, “Justification for Modifying the Corrosion Control Sampling Frequencies”, HLW-STE-2002-00136, April 8, 2002.