Contract No. and Disclaimer:

This manuscript has been authored by Savannah River Nuclear Solutions, LLC under Contract No. DE-AC09-08SR22470 with the U.S. Department of Energy. The United States Government retains and the publisher, by accepting this article for publication, acknowledges that the United States Government retains a non-exclusive, paid-up, irrevocable, worldwide license to publish or reproduce the published form of this work, or allow others to do so, for United States Government purposes.

Analysis of the ANL Leak Test Method for 6CVS Containment Vessels

Donald J. Trapp and George Crow
Savannah River National Laboratory
Building 723-A, Savannah River Site, Aiken, SC 29808

ABSTRACT

In the fall of 2010, Argonne National Laboratory (ANL) contracted with vendors to design and build 6CVS containment vessels as part of their effort to ship Fuel Derived Mixed Fission Product material. The 6CVS design is based on the Savannah River National Laboratory's (SRNL) design for 9975 and 9977 six inch diameter containment vessels. The main difference between the designs is that the 6CVS credits the inner O-ring seal as the containment boundary while the SRNL design credits the outer O-ring seal. Since the leak test must be done with the inner O-ring in place, the containment vessel does not have a pathway for getting the helium into the vessel during the leak test.

The leak testing contractor was not able to get acceptable leak rates with the specified O-ring, but they were able to pass the leak test with a slightly larger O-ring. ANL asked the SRNL to duplicate the leak test vendor's method to determine the cause of the high leak rates.

The SRNL testing showed that the helium leak indications were caused by residual helium left within the 6CVS Closure Assembly by the leak test technique, and by helium permeation through the Viton O-ring seals. After SRNL completed their tests, the leak testing contractor was able to measure acceptable leak rates by using the slightly larger O-ring size, by purging helium from the lid threads, and by being very quick in getting the bell jar under a full vacuum.

This paper describes the leak test vendor's test technique, and other techniques that could be have been used to successfully leak test the 6CVS's.

INTRODUCTION

In 2010, Argonne National Laboratory contracted with NAC International (NAC) to provide a shipping cask to ship Fuel Derived Mixed Fission Product material. NAC designed a 6-inch Containment Vessel Short (CVS) containment vessel, which uses a lid with a coned seal with two O-ring seals. This design is based on the SRS design for 9975 and 9977 six-inch diameter containment vessels. The main difference between the designs is that the 6CVS credits the inner O-ring seal as the containment boundary while the SRS design credits the outer O-ring seal. The leak testing contractor, who was tasked to perform the acceptance leakage rate test of the 6CVS's at the fabricator's shop, had trouble getting an acceptable leakage rate using helium as the test gas and the specified size 252 Viton GLT-S O-rings, but they were able to successfully leak test the vessels with size 255 O-rings made of an unspecified material.

ANL requested the SRNL to duplicate the leak test contractor's test method to determine if the high leak rates were caused by a problem with the design or with manufacturing problems, or by the test method. All tests were performed on standard 6-inch containment vessels that are used in 9975 and 9977 shipping packages.

1.0 Results and Discussion

1.1 Description of the 6CVS Containment Vessel

The 6CVS is a modified Chalfant-style containment vessel, which is a Savannah River design that has been used in the radioactive materials packaging and transportation industry for over 20 years. The lid has a cone-shaped sealing area and two Viton O-ring seals. The Cone Seal Nut has a large hexagonal boss which permits remote operations of the closure in high radiation cells. The dimensions and materials for the lid seal are identical to the standard SRNL design.

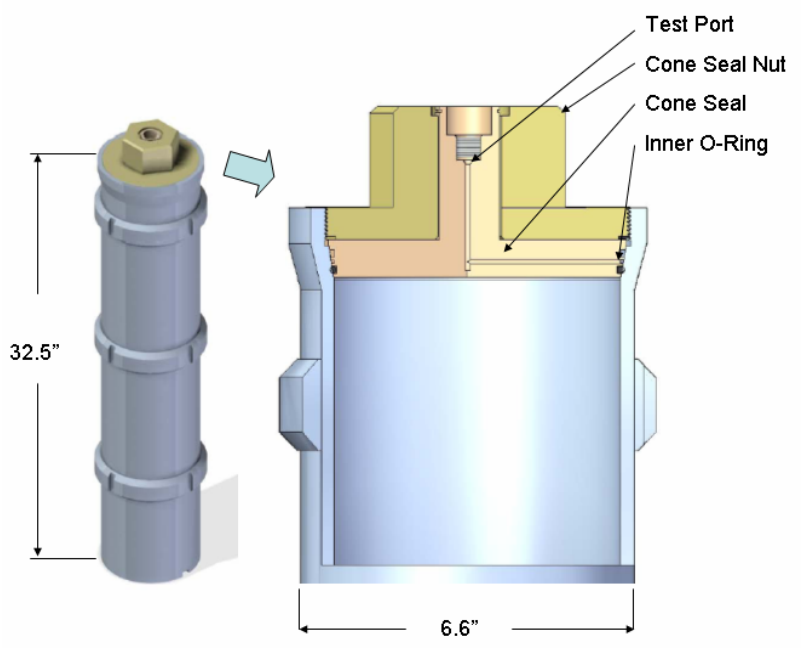

After closure, there is no pathway to flow helium into the vessel.

Figure 1 6CVS Design

1.2 Description of the Leak Test Contractor's Test Method

SRNL has traditionally leak tested the containment vessels with the outer O-ring installed and with the inner O-ring removed. This allows a pathway through the leak test port to introduce helium into the vessel. However, the containment boundary for the 6CVS includes the inner O-ring seal, so the leak test contractor had to test the 6CVS's with the inner O-ring installed, which sealed off that pathway.

The leak test contractor's test sequence is described below:

1. Place the open 6CVS vessel in an anti-rotation fixture. 2. Place a Lexan vacuum/helium plate over the top of the vessel. 3. Pump the vessel down to a full vacuum. 4. Backfill the vessel with helium to atmospheric pressure.	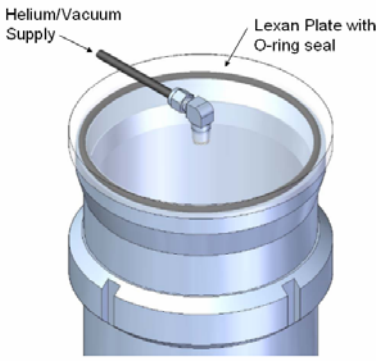

5. Quickly push the Lexan plate aside and move the Cone Seal Plug into place	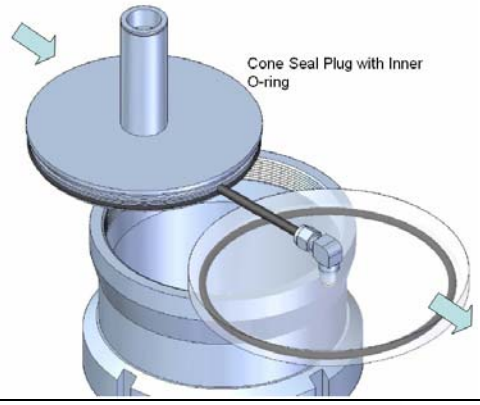
6. Install the Cone Seal Nut and torque it closed.	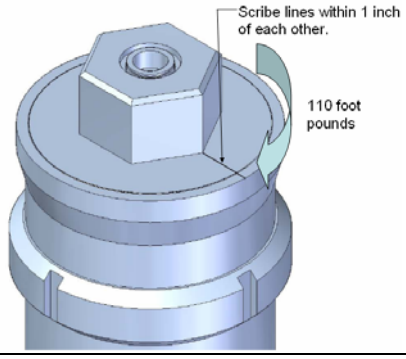
7. Quickly place the belljar over the 6CV. 8. Pump down the belljar to a full vacuum with helium leak detector and/or vacuum pump. 9. Wait for leak detector to indicate a steady reading; expected to be less than the leak acceptance criterion.	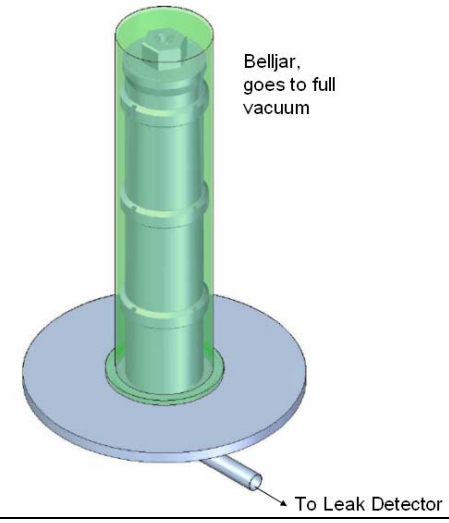

The steps include the word “Quickly” because helium permeates through the Viton material of the O-ring seals. When the helium breaks through the seal, it is sensed by the leak detector as leakage, even though there is no actual leak path. Figure 2 shows a helium permeation curve for a typical Chalfant containment vessel. In time, the permeation rate will exceed the acceptance criterion for the leak test, which will shut down the leak test.

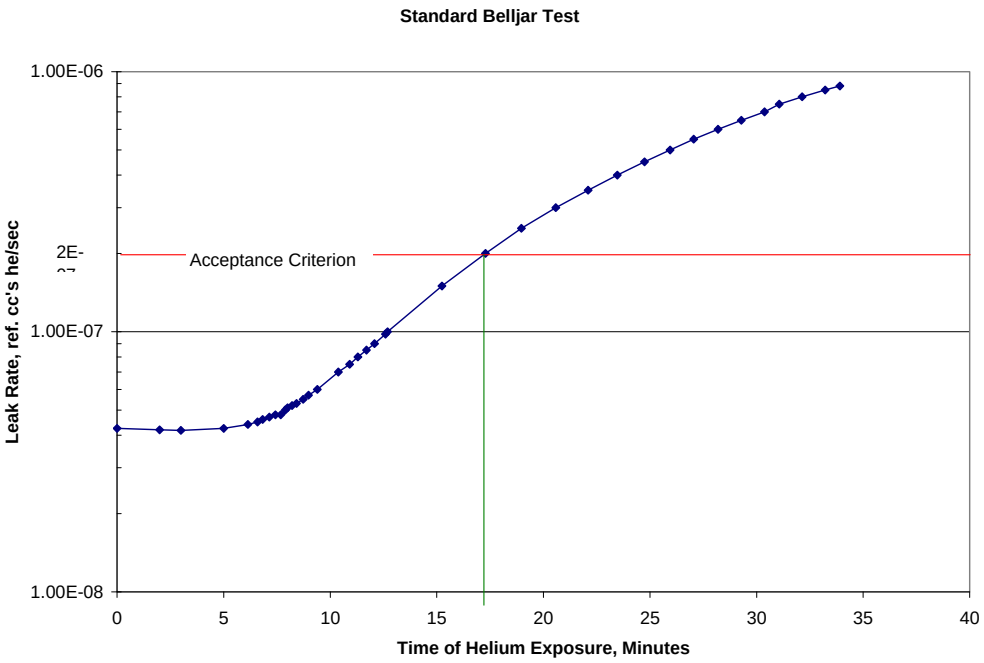

Figure 2. Helium Permeation Rate vs. Time

Amazingly, the leak test contractor was able to install the lid, pump down the Belljar to a full vacuum, and get the leak detector into the fine test mode in about 40 seconds. The leak test curves were shaped like the curve in Figure 3, with the helium leak rate dropping rapidly at first while the leak detector was pumping down the test system, but then slowing climbing back up as helium began to permeate through the Viton O-Rings.

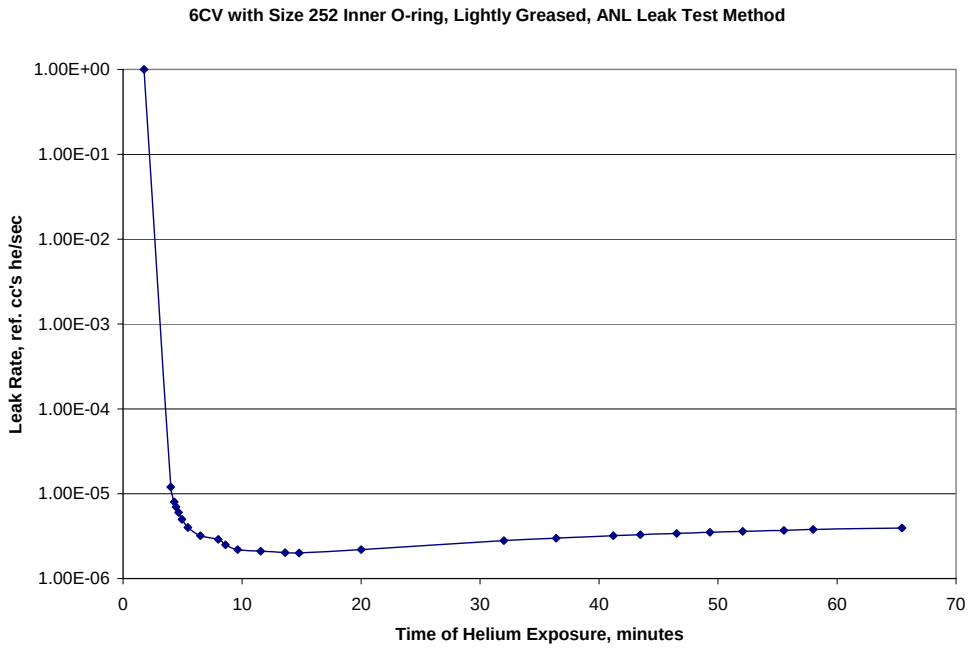

Figure 3. Typical Leak Rate vs. Time Curve for the ANL Leak Test Method

The leak test contractor was not able to get 6CVS's to pass the leak test with Size 252 O-rings, but they were able to get acceptable leak rates with size 255 O-rings.

SRNL attempted to use the same method to leak test 6CV containment vessels with Size 252 and Size 255 O-rings, but we were unable to get an acceptable leak rate. Figure 4 is a chart of the leak tests that came closest to passing. The heavy spiking was probably caused by helium burping out of the containment vessel lid threads. Unlike the ANL tests, SRNL kept the Cone Seal Plug and the Cone Seal Nut assembled, which exposed the threads to highly concentrated helium just before the lid was torqued closed. The SRNL attempts also resulted in high helium backgrounds in the leak test systems, which took hours to clean up.

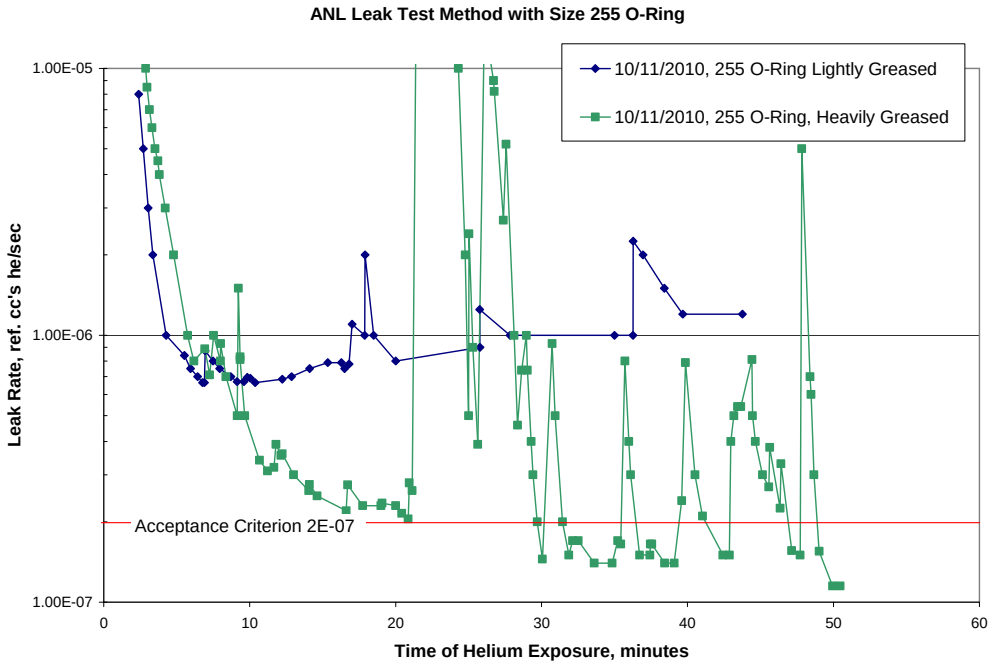

Figure 3. Typical Leak Rate vs. Time Curve for SRNL's Simulation of the ANL Leak Test Method

1.3 Finding the Cause of the Failed Leak Tests

SRNL wanted to determine if the failed leak tests were caused by a problem with the design or the manufacturing process, or by a problem with the leak test method. We did this by leak testing a single Chalfant-style containment vessel using the following three leak test methods on the same lid seal. We did not touch the lid assembly between these tests.

1. The ANL leak test method
2. Standard belljar leak test, with an evacuation/helium line connected directly to the vessel.
3. Belljar leak test using a Helium Release Device (HeRD). The HeRD is a cylinder pressurized with pure helium and loaded into the 6CV before the first test is performed. During a standard belljar test, a magnetically activated valve on the HeRD opens to release helium into the 6CV.

The test series was performed on a portable test stand in SRNL's Building 723-A C-Cubicle. This test stand has a non-rotation stand welded on it, which allowed us to evacuate and backfill the 6CV on the test stand to reduce assembly time as much as possible. The tests used a 6CV vessel that has a ¼-inch pipe thread in the bottom. This allowed SRNL to evacuate and backfill the vessel during a standard belljar test.	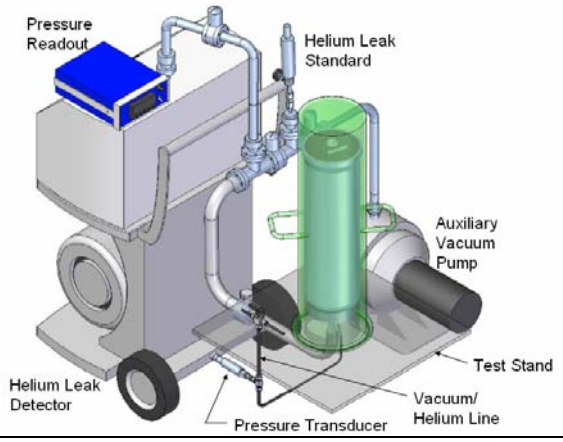
1. The 6CV is connected to the Test Stand as shown.	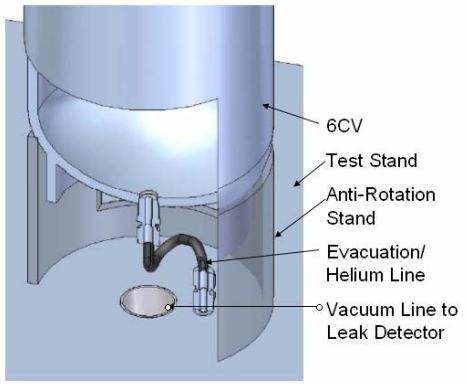
2. We evacuated and charged a Helium Release Device (HeRD) with 54 psig of pure helium. The HeRD has a magnetic switch that opens a battery-operated solenoid valve when a magnet is placed close by. Since stainless steel and aluminum are transparent to a magnetic field, the switch can be actuated while it is inside of the 6CV during a bell jar leak test. The digital manometer senses the pressure that surrounds it, and captures the maximum pressure reading. At the end of the leak test, when it is removed from the 6CV, it reads the maximum leak test pressure.	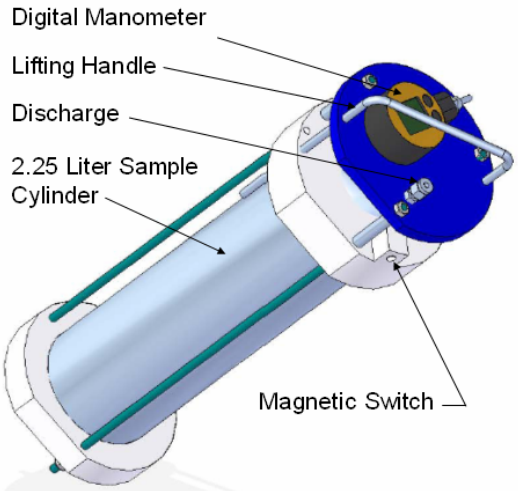

3. Place the HeRD in the 6CV Vessel, using care to line the magnetic switch up with the scribe line at the top of the vessel. 4. Perform the ANL leak test method as previously described.	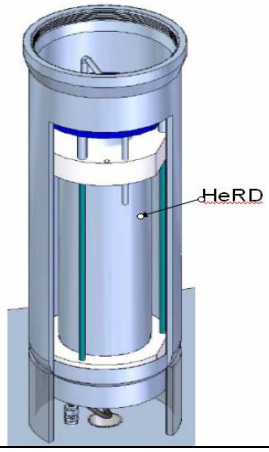
5. Pump out the bell jar and the inside of the 6CV assembly overnight to reduce the helium background to an acceptable level. NOTE: The 6CV assembly and the bell jar were not touched between leak tests. 6. Perform a **standard bell jar leak test** with the following steps: a. Read the helium leak standard and the helium background. b. Fill the 6CV vessel to atmospheric pressure with pure helium. c. Allow the leak test to run until a stable reading is reached. 7. Pump out the bell jar and the inside of the 6CV assembly overnight to reduce the helium background to an acceptable level.	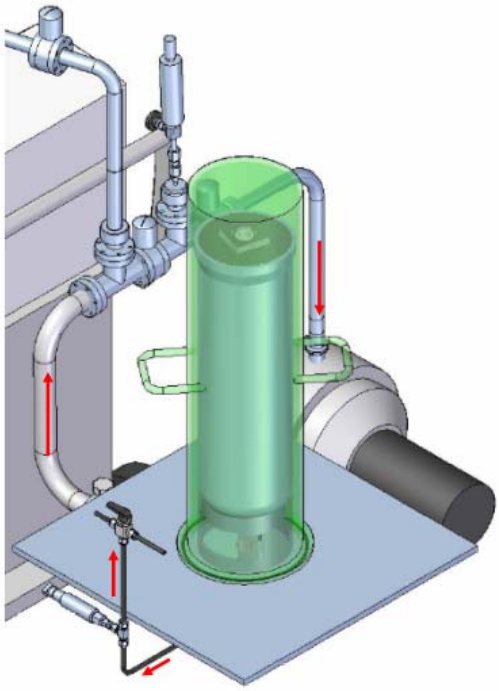
8. Perform the HeRD bell jar leak test with the following steps: a. Read the helium leak standard and the helium background. b. Backfill the 6CV vessel with air to atmospheric pressure. c. Place a magnet near the HeRD's magnetic switch and monitor the pressure reading on the pressure readout. The pressure should equilibrate at ~14.7 psig. d. Allow the leak test to run until a stable reading is reached.	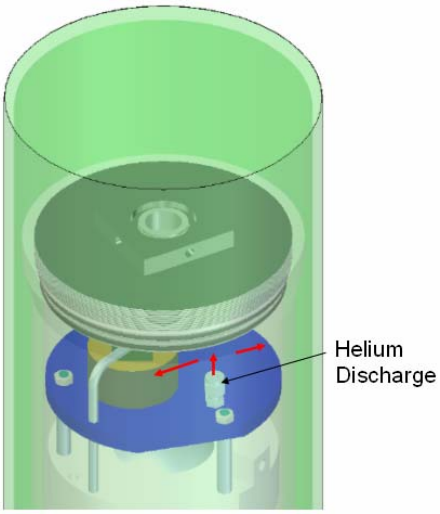

The results of the three tests are shown in Figure 4. The Standard Belljar Test and the Helium Release Device Test show that the lid seal is leak tight. The steady rise in the leak rate for these two tests is caused by helium permeation through the O-ring material. It was **not** caused by an actual leak path through the seal. When helium leaks through an actual leak path, it comes through very suddenly and it usually reaches a steady value in about a minute.

After the three tests were completed, we ran a simple test to show that there was no metal-to-metal seal between the cone seal and the vessel. We removed the O-ring from the Cone Seal Plug, torqued the Closure Assembly closed, and tried to perform a standard belljar test. While the belljar was being evacuated, the pressure inside the 6CV began to decrease, which indicated that the 6CV did **not** have a metal-to-metal seal in the lid.

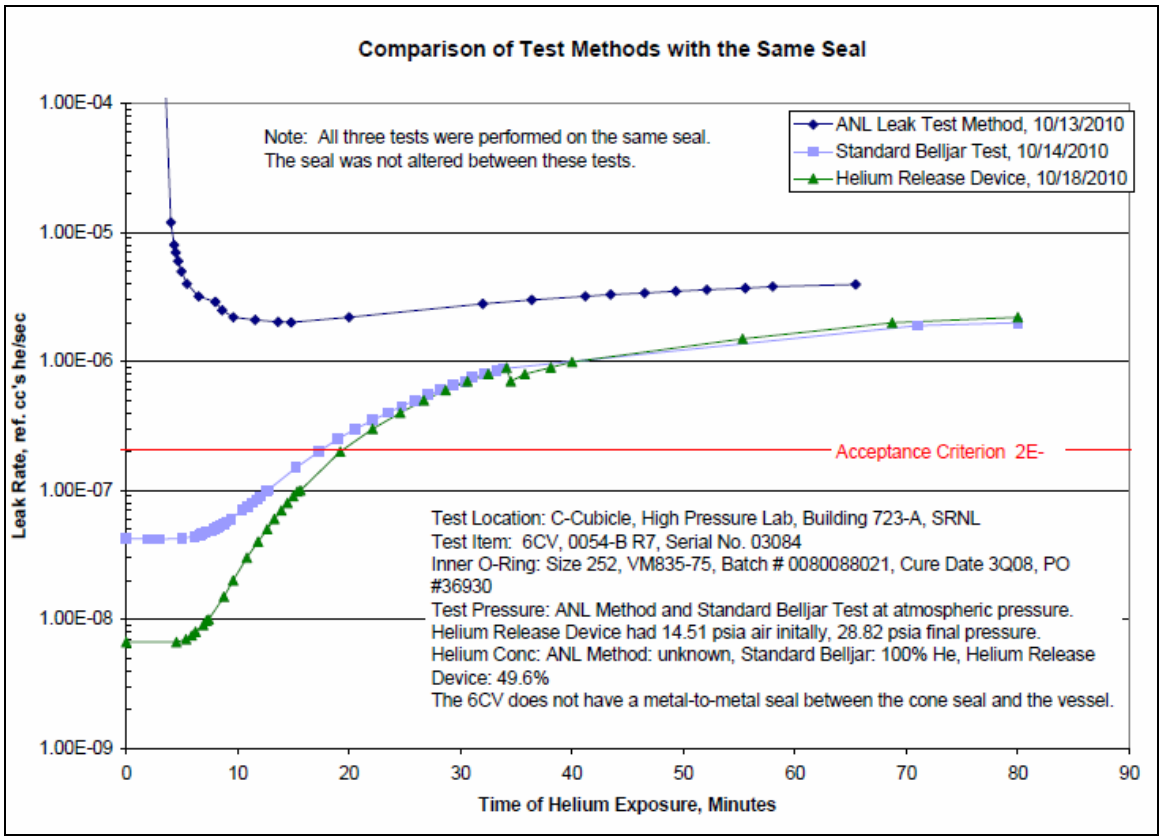

Figure 4 Comparison of Test Methods with the Same Seal

2.0 Conclusions

The three-in-a-series leak tests (Figure 4) showed that the high level of helium that is measured at the beginning of the ANL leak test method is coming from above the O-ring seal. The O-ring seal did not have a real leak. This test also demonstrated the time limit that helium permeation through the Viton O-Ring seals imposes on the leak test. Once the helium permeation exceeds the acceptance criterion (15 minutes in this case) the leak test can no longer determine the quality of the test item. Helium permeation is helium going through the O-ring material. It is not caused by an actual leak path through the seal.

Heavy helium spiking in the initial SRNL tests were probably caused by helium that was trapped in the threads of the Cone Seal Nut and in the test port.

The size 255 O-ring was successfully used in the ANL leak test method because it took longer to permeate helium, which allows a leak test to run 5 times longer than the size 252 O-rings allow. This extra time allowed the vacuum pump to reduce the helium level below the acceptance criterion.

Package certifiers allowed ANL to use the size 255 O-rings. The leak test contractor was able to measure acceptable leak rates for all of the 6CVSs by using the larger O-rings, by purging the lid threads with nitrogen before they closed the lid, and by getting the leak test into the fine test mode as quickly as possible to avoid helium permeation.

For future acceptance leak tests with the inner O-ring in place, two options are available to allow the leak tester to perform a standard bell jar leak test:

- The HeRD introduces helium into the containment vessel after the vessel has been sealed. Figure 4 shows that the HeRD leak test results are identical to a standard helium bell jar test. The HeRD was successfully used to leak test model 9977 6CV's and 6CVL's in 2007. 6CVL's are a 10-foot long version of the 6CVS's.
- The Adapter, which is described in Bradley Loftin's paper. The adapter is a spool piece between the vessel and the lid assembly that allows the leak tester to connect a vacuum/helium line directly to the test item.

3.0 References

3.1 Safety Analysis Report for Packaging, NAC-LWT Legal Weight Truck Cask System, U.S. DOE Docket No. 9225, U.S. DOE – Argonne National Laboratory, Revision LWT/DOE-10C

3.2 SRNL-STI-2010-00672, "Analysis of the ANL Leak Test Method for 6CVS Containment Vessels", Donald Trapp and George Crow, October, 2010