**Contract No:**

This document was prepared in conjunction with work accomplished under Contract No. DE-AC09-08SR22470 with the U.S. Department of Energy (DOE) Office of Environmental Management (EM).

**Disclaimer:**

This work was prepared under an agreement with and funded by the U.S. Government. Neither the U. S. Government or its employees, nor any of its contractors, subcontractors or their employees, makes any express or implied:

1 ) warranty or assumes any legal liability for the accuracy, completeness, or for the use or results of such use of any information, product, or process disclosed; or
2 ) representation that such use or results of such use would not infringe privately owned rights; or
3) endorsement or recommendation of any specifically identified commercial product, process, or service.

Any views and opinions of authors expressed in this work do not necessarily state or reflect those of the United States Government, or its contractors, or subcontractors.

# SRNL Recovery of Plutonium-244 and Heavy Actinides from Mark-18A Targets

## SRNL-MS-2016-00115

## Rev A

# SRNL Recovery of Plutonium-244 and Heavy Actinides from Mark-18A Targets

William F. Swift, Frank D. Sinclair, and Jeffrey S. Allender
Savannah River National Laboratory, Aiken SC, USA

## ABSTRACT

In the 1960s and 1970s, the Savannah River Site (SRS) K Reactor performed high-neutron-flux irradiations to produce unusual and heavy isotopes, including the first significant quantities of californium-252. The 86 Mark-18A target assemblies also produced, as byproducts, most of the world's supply of plutonium-244 and "heavy" curium. These isotopes are of significant interest for precision analyses, targets for new heavy isotope production, and nonproliferation studies, but the supply from 21 assemblies processed in the 1970s is nearly exhausted and is irreplaceable in existing facilities. In 2015, the Office of Nuclear Materials Integration, of the Department of Energy National Nuclear Security Administration, initiated funding for a program to remove the 65 remaining targets from the SRS L Basin, recover the plutonium-244 and transplutonium elements in the Savannah River National Laboratory (SRNL) Shielded Cells Facility, and transfer the product material as oxide to the Oak Ridge National Laboratory. SRNL is performing key modifications to the cells, developing an optimum onsite shipping cask, and modeling the targets to validate actinide contents and identify other isotopes that may be of interest to the scientific and industrial community.

## IRRADIATION HISTORY

From the mid-1960s through the early 1970s, the U.S. Atomic Energy Commission (AEC) operated a High Flux Demonstration Program in the SRS K Reactor – achieving a peak neutron flux of approximately 7 x $10^{15}$ n/cm$^2$/sec, a level that has not been matched in reactors since that time.[1] The program was supported by Dr. Glenn Seaborg, then AEC Commissioner, as a way to produce isotopes that were almost impossible to create otherwise. Some shorter-lived isotopes were removed quickly from the reactor and processed immediately, while longer-lived isotopes were accumulated. The high-flux operations were extended to support qualitative production of $^{244}$Cm, then for heavier curium isotopes, then for two campaigns of producing $^{252}$Cf for research, medical, and industrial applications.[2] Table 1 shows some of the isotopes produced during those campaigns and the laboratories that were primarily involved with research on the products.

**Table 1. Isotopes Produced in SRS High-Flux Demonstration Program**

| Laboratory Customer | Isotopes and Compounds Produced |
|---|---|
| Argonne National Laboratory | $^{30}$Si, $^{48}$Ca, $^{96}$Zr, $^{124}$Sn, $^{150}$Nd, $^{158}$Dy, Hf, Be, $TiO_2$ |
| Lawrence Berkeley National Lab | $^{107}$Ag, $^{108}$Ag, $^{130}$Ba, $^{170}$Er, $^{176}$Lu, $^{177}$Hf, $^{178}$Hf, $^{180}$Ta, $^{181}$Ta, $^{190}$Os, $^{209}$Bi, LiCl |
| Lawrence Livermore Laboratory | MgO/$^{50}$Cr, $KPO_3$, Ar, $HfO_2$,Os, W, Re, Xe |
| Oak Ridge National Laboratory | $^{33}$S, $^{54}$Fe, $^{62}$Ni, $^{93}$Nb,$^{146}$Nd, $^{154}$Sm, $^{168}$Yb, RbCl, $Be_3N_2$ |
| Multiple Laboratories | $^{40}$Ca, $^{58}$Fe, $^{58}$Ni, $^{118}$Sn, $^{144}$Sm, $^{150}$Sm, $^{156}$Dy, $^{159}$Tb, $^{160}$Gd, $^{162}$Er, $^{164}$Dy, $^{165}$Ho, $^{169}$Tm, $^{176}$Yb, $^{180}$Hf, $^{186}$W, $^{187}$Re, $^{192}$Os, $^{241}$Am |
| Heavy Isotopes for National Security, Research, and Industry | $^{242}$Pu, $^{243}$Am, $^{244}$Cm, $^{244}$Pu, $^{246}$Cm, $^{248}$Cm, $^{249}$Bk, $^{252}$Cf, $^{254}$Es, Fm |

The first campaigns that focused on heavy isotopes used targets that were highly enriched in $^{240}$Pu from previous irradiations, producing plutonium that was enriched in $^{242}$Pu. Figure 1 shows how most of the actinide mass is lost to fission products and radioactive decay, and less than 1% of a target beginning as $^{240}$Pu could be converted eventually to $^{252}$Cf.[3] After sufficient

$^{242}$Pu had accumulated, it was used as the starting material for further californium production. Targets using this isotope were configured in what was called Mark-18 assemblies.

**Figure 1. Losses in Reactor Production of Heavy Isotopes**

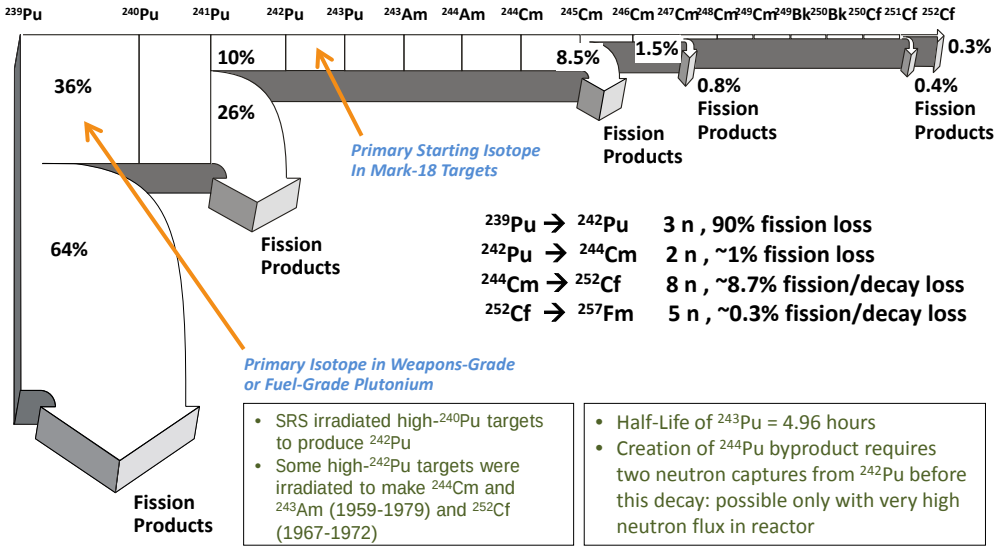


Twenty-one Mark-18 assemblies were processed for isotope recovery at Oak Ridge National Laboratory (ORNL) in the 1970s. Those targets provided all of the $^{252}$Cf produced in the U.S. before the startup of ORNL's High Flux Isotope Reactor (HFIR). Figure 1 shows that nearly 4% of the starting $^{242}$Pu could be converted, but targets that began instead with a large fraction of $^{246}$Cm could expect up to 20% conversion, with up to 40% conversion for the irradiation of $^{248}$Cm. Higher isotopes from the Mark-18 assemblies have served as the primary feed material for HFIR production of $^{252}$Cf and superheavy isotopes.

Besides producing heavier isotopes, the high-flux campaigns also provided a bonus by creating $^{244}$Pu. This isotope is not identified in Figure 1 because the 5-hour half-life of $^{243}$Pu will normally cause it to decay to $^{243}$Am. Only with very high neutron fluxes could enough $^{243}$Pu nuclei experience a second neutron capture, forming $^{244}$Pu, before decay to americium. $^{244}$Pu is extremely long-lived (half-life of 81 million years).

$^{244}$Pu is extremely valuable for use in nuclear forensics and as an analytical tracer in high-precision chemical analysis because it is not produced in any other reactor fuels and targets.[4] Separated $^{244}$Pu is at least three times as efficient as $^{242}$Pu as a tracer. Previous articles describe the impacts and utilization of $^{244}$Pu, together with the heavy curium that is also held in the target assemblies.[5]

## 1970s RECOVERY AT ORNL

Starting in 1968, Savannah River Laboratory processed californium from earlier targets in shielded cells and produced and packaged $^{252}$Cf sources in special-form capsules for medical, research, and industrial applications.[6] In 1971, program support was expanded into the new Transplutonium Processing Plant at ORNL (now known as the Radiochemical Engineering

Development Center, REDC) and other heavy actinides were also recovered and stored. Curium and californium support activities were consolidated at ORNL in 1986.

SRS shipped 21 Mark-18A targets to ORNL. At ORNL, the targets were dissolved and a number of isotopes were recovered including $^{244}$Pu, $^{249}$Bk, $^{252}$Cf, $^{254}$Es and Fm. The recovery program took about 2 ½ years to complete.

Process details and lessons learned from these operations are presented elsewhere in these Proceedings.[7]

## CURRENT STATUS

Sixty-five of the original eighty-six target assemblies remain in the L Basin. They are stored vertically; each in dual isolation cans as shown in Figure 2. When canned, some targets were observed to have cladding damage. There are no subsequent indications of target failure. Each of the cans is vented through a "J tube" to the surrounding basin water.

Non-destructive assay was completed on three of the targets in November 2015. There were no indications of target failure during the assay. The targets were not removed from their storage cans. The outer can for each target appeared to be in very good condition (Figure 3). The condition of the targets could only be inferred by detection of radiation along the length of the target. There were no undue concentrations of radiation in the target cans and there was no increased water contamination during the transitions from vertical to horizontal to vertical. Assay results are reported elsewhere in these Proceedings.[8]

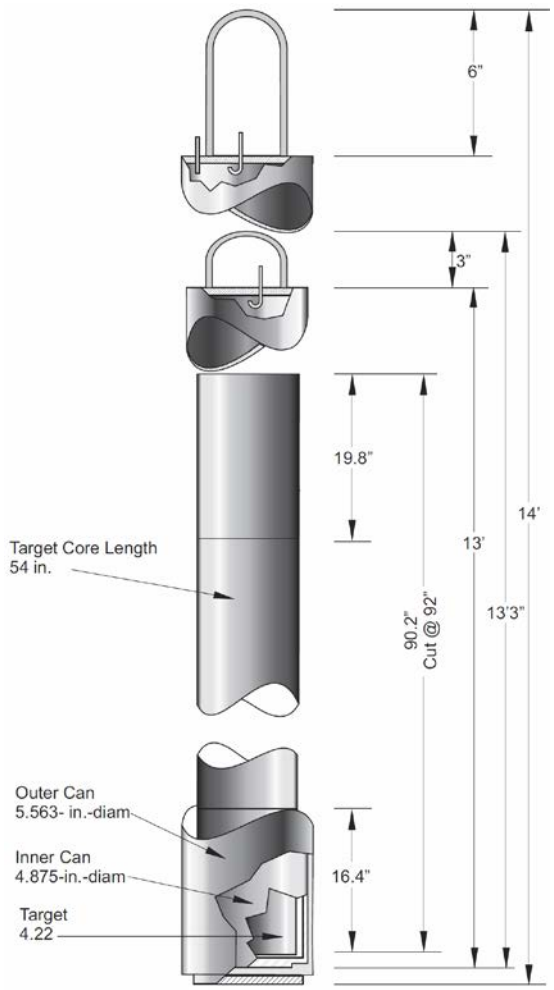


**Figure 2, Mark-18A Target in Storage Cans**

**Figure 3. Photo of Mark-18A Underwater During NDA**

## PATH TO RECOVERY

The world supply of separated $^{244}$Pu and the heavy curium, derived essentially from the Mark-18 assemblies that were processed earlier, is nearly depleted. The infrastructure to produce the $^{244}$Pu no longer exists and could not be readily recreated. The National Nuclear Security Administration (NNSA) therefore commissioned a program[9] to recover the isotope from the remaining assemblies, still in storage in the L-Basin facilities at SRS, before the targets are considered for other disposition. The materials contained in the Mk-18A targets are invaluable as the Mark-18A targets represent about 80-90% of the world's supply of unseparated Pu-244. The NNSA Office of Nuclear Material Integration (ONMI) began funding studies of the recovery of the Mark-18A targets in 2012. In 2015 ONMI began funding the current program to proceed with recovery of the $^{244}$Pu in the Mark-18A targets. Based on the current funding projections, the first target should be recovered in FY21 and all of the targets should be recovered by FY28.

## FY16 PROGRESS

Planning and development has evolved significantly in the last year. In the last year the onsite transfer cask to move the targets from L basin to the SRNL shielded cells has been designed. The cask has been designed to satisfy numerous requirements. It is designed to operate in L Basin similar to another onsite shipping cask. It is also designed to appropriately shield the targets which have a high neutron dose component in addition to a high gamma dose. And the cask had to be sufficiently light to be handled by a 10 ton overhead crane in SRNL. The development of the cask is documented elsewhere in these proceedings.[10]

**Figure 4. Mark-18A Cask Design**

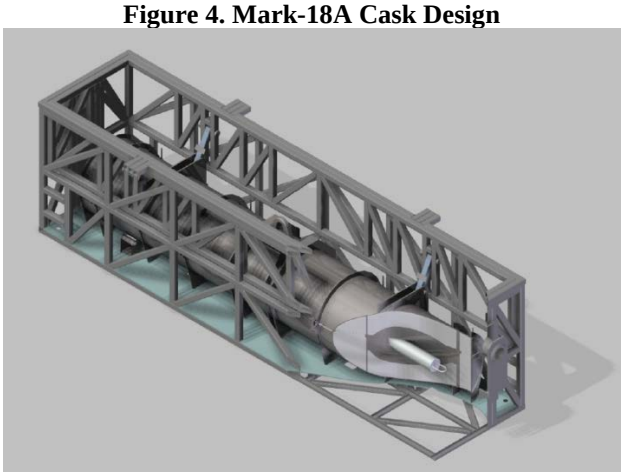

The process flow has also been improved. The shielded cells were going to be loaded from the top with an entire 14 foot long target. Now the cells will be loaded horizontally through an existing gate in the rear of the cells. The target will be size reduced during its introduction into the cells. A transition piece is being developed to provide the pass through the gate into the cell.

Research and development on flowsheet validation is also proceeding. Flowsheet validation will continue through FY17.

Initial safety documentation is in progress. The hazards analysis will be completed in phases corresponding to appropriate work divisions. The first phase encompassing the cask loading and receipt at SRNL has been completed. Subsequent phases will cover the unloading, target processing, and product packaging and shipping.

An environmental evaluation checklist has identified that a Supplement Analysis (SA) and subsequent Record of Decision (ROD) are the correct documents to proceed with the recovery of the Mark-18A targets. The SA is in review.

## RISK

The Mark-18A Target Material Recovery Program (MTMRP) maintains a risk register that is updated at least annually. The SRNL portion of the scope as described in this paper maintains a risk register that is updated at least monthly. Risks are continuously evaluated and added to the risk register as appropriate. A number of risks have also been closed as the program has implemented mitigation actions and resolved uncertainties such as shielding in the cask design and characterization of the targets. The risk management plan is described more thoroughly elsewhere in these Proceedings.[11]

## CONCLUSION

The Mark-18A target material recovery program is fully underway with support from ONMI and Oak Ridge National Laboratory. SRNL is on track to receive and process the first Mark-18A target by FY21.

…….

## REFERENCES


1. J. L. Crandall, compiler, *The Savannah River High Flux Demonstration*, DP-999, June 21, 1965.

2. R. M. Harbour, C. H. Ice, W. H. Hale, and J. T. Lowe, "Development of Chemical Processes and Equipment to Recover Curium-244 and Californium-252," WSRC-MS-2000-00061, in *50 Years of Excellence in Science and Engineering at the Savannah River Site: Proceedings of the Symposium, May 17, 2010*."

3. B. Patton, S. Robinson, J. Allender, C. Alexander, and E. Collins, "Evaluation of Disposition Options for the Special Actinides in the Mk-42 and Mk-18A Target Materials," in *Proceedings of the American Nuclear Society Winter Meeting*, November 2012.

4. W. E. Bickford and J. S. Allender, *Pu-244 in Mark-18A Targets: Estimate of Replacement Effort and Costs*, WSRC-TR-2005-00137, March 23, 2005.

5. J. S. Allender, N. J. Bridges, B. M. Loftin, and M. D. Dunsmuir, "SRNL Development of Recovery Processes for Mark-18A Heavy Actinide Targets," SRNL-STI-2015-00326, in *Proceedings of the 56th Annual Meeting of the Institute of Nuclear Materials Management*, July 2015.

6. A. R. Boulogne, W. C. Mosley, Jr., and V. W. Walker, "252Cf Encapsulation at the Savannah River Laboratory," DP-MS-75-113, in *Proceedings of the International Symposium on the Utilization of Californium-252*, April 26-28, 1976."

7. B. Patton, S. Robinson, D. Benker, and C. Phelps, "Lessons Learned from Processing Mark-18A Targets at Oak Ridge National Laboratory," in *Proceedings of the 57th Annual Meeting of the Institute of Nuclear Materials Management*, July 2016.

8. S. Branney, C. Verst, and N. Bridges, "Modeling and NDA Verification of Mk18A Target Irradiation," in *Proceedings of the 57th Annual Meeting of the Institute of Nuclear Materials Management*, July 2016.

9. S. Robinson, J. Allender, N. Bridges, B. Loftin, and B. Patton, *Recovery of Mark-18A (Mk-18A) Target Materials: Program Management Plan*, ORNL/TM-2014/314, August 2014.

10. B. M. Loftin and G. Abramczyk, "Design of a Cask for Onsite Transfer of Full Targets at the Savannah River Site," in *Proceedings of the 57th Annual Meeting of the Institute of Nuclear Materials Management*, July 2016.

11. S. Robinson, B. Patton, and W. Swift, "Use of Risk Management in Implementing the Mark-18A Target Material Recovery Program," in *Proceedings of the 57th Annual Meeting of the Institute of Nuclear Materials Management*, July 2016.