Contract No:

This document was prepared in conjunction with work accomplished under Contract No. DE-AC09-08SR22470 with the U.S. Department of Energy (DOE) Office of Environmental Management (EM).

Disclaimer:

This work was prepared under an agreement with and funded by the U.S. Government. Neither the U. S. Government or its employees, nor any of its contractors, subcontractors or their employees, makes any express or implied:

1) warranty or assumes any legal liability for the accuracy, completeness, or for the use or results of such use of any information, product, or process disclosed; or
2) representation that such use or results of such use would not infringe privately owned rights; or
3) endorsement or recommendation of any specifically identified commercial product, process, or service.

Any views and opinions of authors expressed in this work do not necessarily state or reflect those of the United States Government, or its contractors, or subcontractors.

SRNL-L4500-2016-00094, #571
Proceedings of INMM 57th Annual Meeting
Marriott Marquis, Atlanta, GA, July 24-28, 2016

TRITIUM HYDRIDE TRANSPORT VESSEL DESIGN and FABRIACTION

Paul S. Blanton, Kurt R. Eberl, G. Abramczyk
Savannah River National Laboratory
Savannah River Site, Aiken, SC 29808

ABSTRACT

The Hydride Transport Vessel (HTV) design was developed at Savannah River Site (SRS) as a means to transport tritium. When exposed to tritium gas, the depleted uranium in the HTV releases heat as the tritium is absorbed and forms a solid uranium tritide. Storing tritium as a solid provides advantages over a gaseous storage in both handling and transport safety. This paper discusses the ASME design requirements applicable to the HTV, the ASME Section III, Division 1, Subsection NB containment requirements associated with material transport and the ASME Section VIII, Division 1, Lethal Service facility process requirements associated with the hydride reaction. Design features and fabrication details unique to this vessel type are also discussed.

INTRODUCTION

Tritium is a radioactive isotope of hydrogen with mass approximately three times that of the common protium isotope. It is a weak beta (β) emitter; where emissions cannot penetrate the outermost layer of skin. It is rarely found naturally; but produced in nuclear reactors. Applications for its use are wide: commercial (e.g., exit signs, watches), nuclear weapons and more recently fuel for controlled nuclear fusion (e.g., experimental fusion reactor ITER and the National Ignition Facility). Since tritium can permeate steels, plastics and rubber, the storage of tritium on solids has advantages.

The SRS Hydride Transport Vessel is a reusable tritium vessel designed to retain tritium as a uranium tritide. The design satisfies requirements as a facility tritium process vessel and a radioactive materials package Type B containment vessel used for transportation.

REGULATORY AND CODE REQUIREMENTS

For facility qualification as a process vessel, the HTV is designed for 945 psig at a 600°C to the requirements of American Society of Mechanical Engineers (ASME) Boiler and Pressure Vessel Code (B&PVC), Section VIII, Division 1, meeting lethal service requirements per Code paragraph UW-2. For qualification as a containment vessel for transportation, the HTV design satisfies the ASME Section III, Division 1, subsection NB, when used in Type B packaging meeting the requirements of 10 CFR 71. Under the design conditions, the HTV must remain leak tight in accordance with the American National Standards Institute (ANSI) N14.5, Leakage Tests on Packages for Shipment of Radioactive Materials.

PACKAGE PERFORMANCE REQUIREMENTS

Type B packaging performance requirements for Normal Conditions of Transport and Hypothetical Accident Conditions are specified by 10 CFR 71.51. The performance requirements, with regulatory reference, are summarized below. The HTV design has been demonstrated to satisfy ASME Section III when subjected to the tests and conditions specified in the table below when used as a radioactive materials packaging containment vessel.

Table 1 Test Conditions for Type B Radioactive Material Shipping Packages

Normal Conditions of Transport *		Hypothetical Accident Condition	
Vibrations	10 CFR 71.71(c)(5)	30-ft drop	10CFR 71.55(f)(1)(i)/71.73(c)(1)
Water Spray	10CFR 71.71(c)(6)	Crush, 1100-lb plate	10CFR 71.55(f)(1)(ii)/71.73(c)(2)
4-ft Free Drop	10CFR 71.71(c)(7)	Puncture	10CFR 71.73(c)(3)
1-ft Drop	10CFR 71.71(c)(8)	Thermal 1,475°F	10CFR 71.73(c)(4)
Compression	10CFR 71.71(c)(9)	3-ft Immersion	10CFR 71.73(c)(5)(6) (3-ft and 50-ft Immersion)
Penetration	10CFR 71.71(c)(10)		
*NCT/HAC conditions are evaluated at temperatures -40°F to 100°F, with Insolation			

DESIGN

The HTV was designed to meet experimental needs for shipping tritium and to be compatible in size and weight with existing designed radioactive material packaging. Facility infrastructure for tritium loading and unloading were also considered in regard to vessel size for heating, process piping connections and materials of construction to address facility and transport safety requirements.

The HTV design is illustrated in Figure 1. The vessel body is comprised of two welded hemispherical machined parts with an approximate internal diameter of four inches. A ring is welded to the bottom section to serve a stand. The top section is machined with a 2-inch diameter nozzle that extends about 4 inches above the top. Two tubes extend through the top of the vessel; the end within the vessel has a porous metal filter and the end outside the vessel has a metal-bellows valve and a metal-seal fitting. The top contains a cylinder that provides lifting features and protects the external tubing. The HTV is ten inches high including the base and handle.

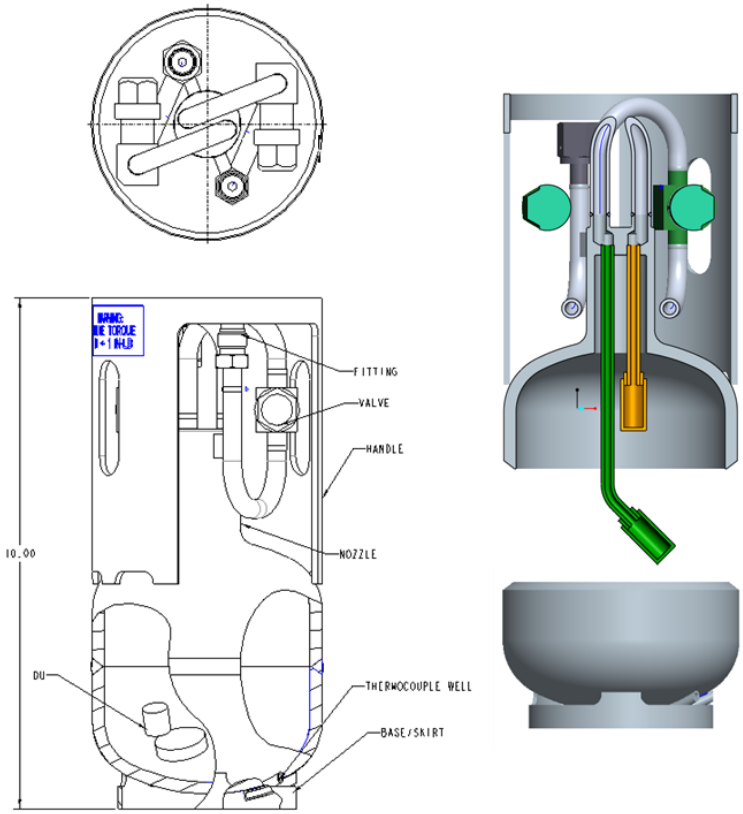

Figure 1 Hydride Transport Vessel

FABRICATION

Radioactive material packaging and its components must meet the quality assurance requirements for design, purchase, fabrication and maintenance, and other aspects of package development specified in 10 CFR 71.101(a). The HTV design drawings and procurement documentation establish fabrication and quality assurance requirements for the HTV. Procurement of the HTV is performed by manufacturers that demonstrate compliance with the quality requirements of the ASME NQA-1 Program which is compatible with the quality requirements specified by 10 CFR71, Subpart H.

The bottom section is machined and fitted with the skirt and thermocouple (TC) tubing. The skirt is left longer than designed in the event a height adjustment is required following final weldment of the HTV assembly. The top section with nozzle is machined and fitted with two external valve assemblies and the protective handle. To minimize vessel height, the valve tubing assemblies are contain several bends. To reduce the possibility of twisting the tube assemblies during attachment to external facility piping the tubes are stiffened by welding to the nozzle via a small gusset. Internal to the HTV are two 2-micron porous SS filters welded to tubing of different lengths; the welded filter tube assemblies are then welded into the top of the HTV nozzle by Bau-4 vacuum brazing. The short filter length assembly is sized to be above the HTV final closure weld so as not

to interfere with post radiographic weld inspection, whereas, the longer filter assembly is designed to be in the uranium hydride; it is further cantered at its end to avoid impacting the vessel wall and being damaged during heating. Prior to brazing the filter assemblies to the vessel, the filters and their welded connections are confirmed to meet bubble point test requirements. The 2-micron filters are sized to mitigate release of hydride particles during tritium extraction operations. Figure 2 illustrates the filter assemblies and their orientation following vacuum brazing to machined sockets in the top of the nozzle. Figure 3 illustrates a bubble point test of the assembly prior to brazing. Bubble point testing per ISO 4003 and/or ASTM E-128 involves specification of a regulated flow through the filter assemblies and confirmation of uniform bubble formation through the filter to verify tube weld connection to filters and filter porosity has not been compromised following welding.

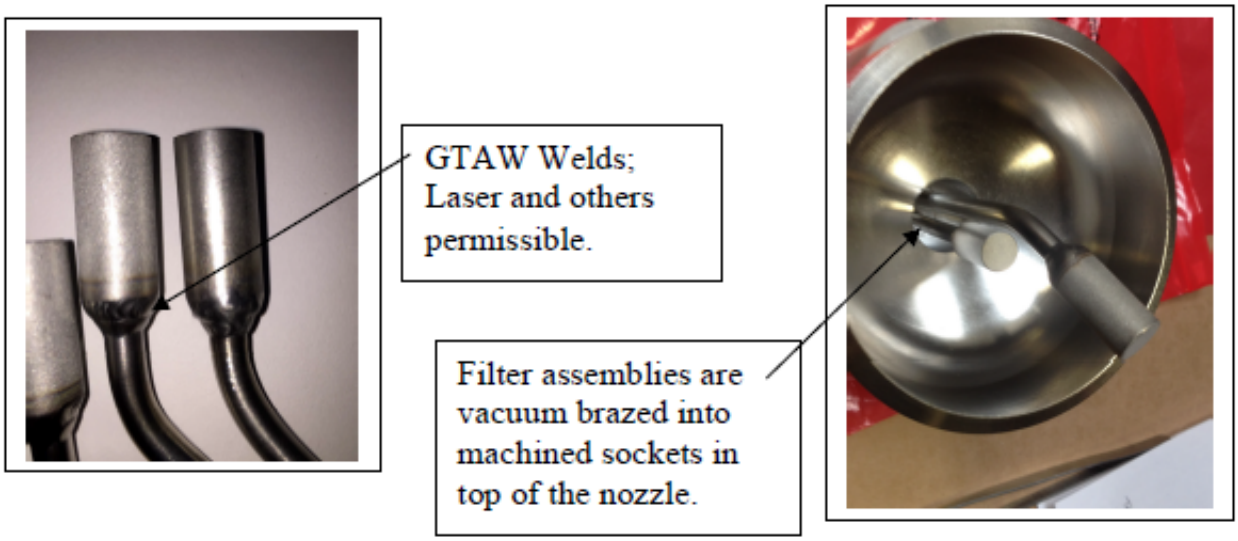

Figure 2 Stainless Steel 2-micron filter Assemblies

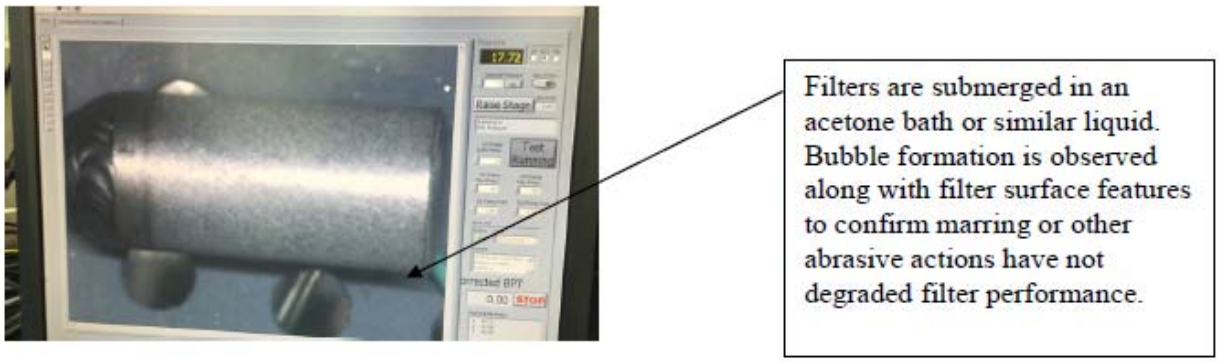

Figure 3 Bubble Point Test

Following required inspection and acceptance of all tubing assembly welds by liquid penetrant testing (PT) and radiography the fabricated halves of the HTV are joined by a full penetration closure girth weld. Just prior to vessel closure, approximately 500 grams of depleted uranium (DU) is loaded into the lower hemispherical head. Specific purity specifications and size for the DU are specified. Figure 4 illustrates DU loading in the vessel bottom and top section ready for closure. The vessel is marked so that when assembled the long filter tube assembly aligns with the TC tubes welded to the bottom of the HTV. Uranium is pyrophoric when finely divided. Air and oxygen sources are restricted during any operation as uranium will react with oxygen to form uranium oxide which degrades HTV tritium capacity. Once the DU is loaded, both halves are assembled and purging with inert gas is initiated to mitigate any oxide formation. The final girth weld is made with an inert purge.

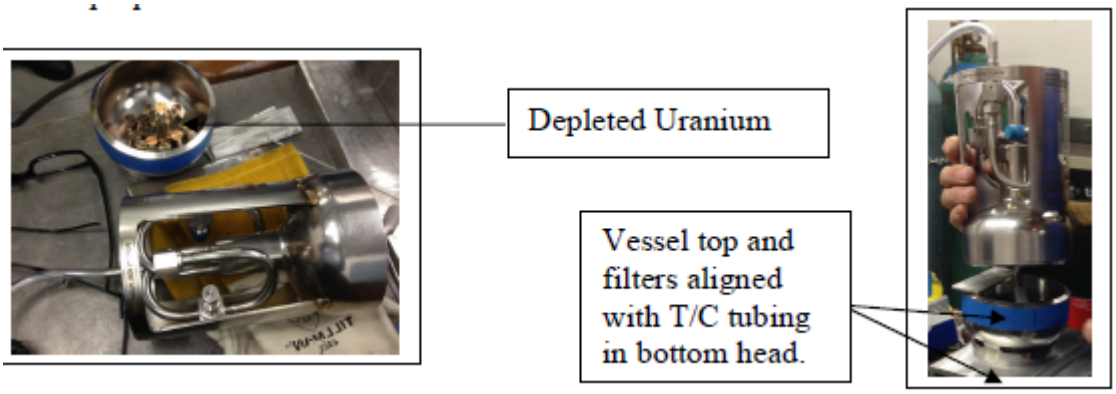

Figure 4 DU Loading in HTV and Preparation for vessel closure

Following completion of the girth weld connecting the HTV top and bottom sections, the weld is die-penetrant tested and radiographed to confirm ASME weld acceptance. Figure 5 illustrates the PT process. A red dye is applied on the weld followed by a coating of developer (white). Any surface imperfections are clearly observed by leaching of the red dye through the developer. Radiography verifies the volumetric acceptance of the weld. On acceptance of these examinations, the HTV is structurally pressure tested to 1,000 psig per ASME followed by ANSI N14.5 leak tightness testing; leakage rate acceptance is less than 10-7 air sec/cc. Containment boundaries are verified for transportation and facility functions.

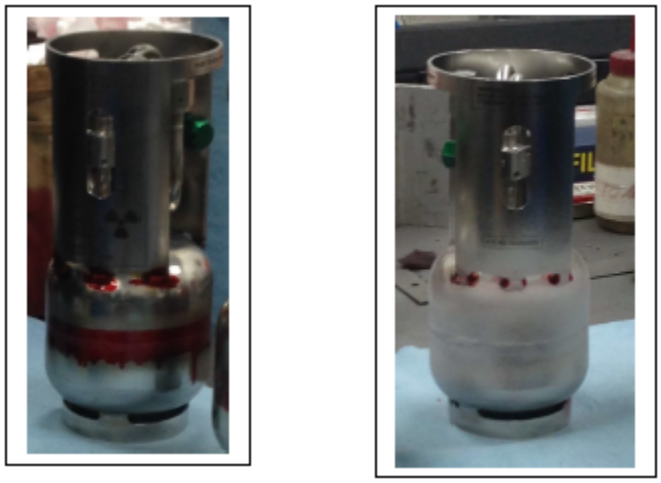

Figure 5 HTV Final Assembly PT weld Examination

Figure 6 illustrates a mass spectrometer leakage test setup for the HTV and illustrates the HTV containment boundaries credited under facility and transportation conditions. For transportation the HTV containment boundary is shown with bold lines and comprises the HTV body and upper tubing assembly up to the closed valve tips. The facility containment boundary extends past the valves to the fittings shown as a dashed line past the valves. When the valves are open the containment boundary includes the metal bellows part of each valve.

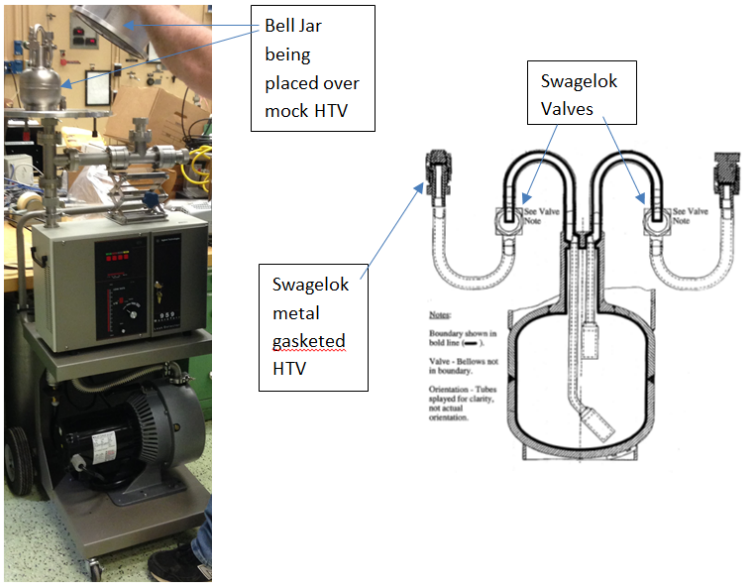

Figure 6 HTV Mass Spectrometer Helium Leal Testing and Designated Containment Boundaries

On completion of fabrication and verification of HTV weld and leak tight integrity, and prior to first use, the depleted uranium is activated (i.e., converted from solid pieces to a powder) by

heating in the presence of hydrogen. Following activation, tritium gas is slowly loaded into vessel for a controlled reaction rate; the absorption process is exothermic with the depleted uranium to form solid uranium tritide. The HTV is a limited life component; service life for the vessel begins following the first loading of tritium. Figure 7 illustrates completed vessels.

Figure 7 Hydride Transport Vessel

To reverse the reaction and generate appreciable gaseous tritium , an endothermic process, temperatures exceeding 350ºC are required.

SUMMARY

The HTV is designed to retain tritium in the form of solid uranium tritide rather than gaseous tritium. Its design and fabrication satisfies the requirements for shipment as a containment vessel in packaging and facility requirements set forth for Savannah River Site loading and unloading use.

ACKNOWLEDGEMENTS

The authors wishes to acknowledge the personnel and manufacturer of the recent HTV production for their dedication, professionalism and manufacturing excellence, Terminal Manufacturing, of Berkeley, California.