Contract No:

This document was prepared in conjunction with work accomplished under Contract No. DE-AC09-08SR22470 with the U.S. Department of Energy (DOE) Office of Environmental Management (EM).

Disclaimer:

This work was prepared under an agreement with and funded by the U.S. Government. Neither the U. S. Government or its employees, nor any of its contractors, subcontractors or their employees, makes any express or implied:

1) warranty or assumes any legal liability for the accuracy, completeness, or for the use or results of such use of any information, product, or process disclosed; or
2) representation that such use or results of such use would not infringe privately owned rights; or
3) endorsement or recommendation of any specifically identified commercial product, process, or service.

Any views and opinions of authors expressed in this work do not necessarily state or reflect those of the United States Government, or its contractors, or subcontractors.

Justifying a Type B Exemption Needed for Repatriating Three Husman Irradiators

Edward T. Ketusky, Charles A. McKeel, and Jeffery L. England
Savannah River National Laboratory

ABSTRACT

After 30 years of service, and more than a decade passing since playing a critical role in helping Mexico successfully eradicate the devastating parasitic screwworm, three Husman irradiators near Chiapas Mexico still contained more than 50,000 curies of cesium-137. Since the Cs-137 content represented an undue risk, which included potential use by terrorists or other nefarious organizations, moving them to a secure U.S. location for final disposition was a top U.S Department of Energy priority. To be repatriated, however, each first had to be shown to meet the current Type B transportation requirements.

At the time of design and manufacture each irradiator was subjected to significant review and analysis to ensure compliance with 10 CFR 71.73, with each package demonstrated to be able to withstand the prescribed hypothetical accidents. The NRC Certificate of Compliance (CoC) for use as shipping containers, expired on June 30, 1991. With each irradiator being large and weighing over 16,000 pounds, reconfiguration of the contents or re-packing into currently certified Type B over packs was deemed to neither be feasible or safe to perform due to the location and radioactive content of the Husman Irradiators.

After: 1) a detailed original design review; 2) a review of the history of safe use of the Husman Irradiators for transport; 3) the absence of any unfavorable operational data; and, 4) confirmatory structural analyses, it was determined that authorizing a one-time shipment shipping of the subject Husman Irradiators to their disposal location would ensure equivalent safety and meet the requirements specified in DOE Order 460.1C, thereby allowing for the exemption. This paper details those activities performed to justify the exemption.

INTRODUCTION

The Husman Irradiators were manufactured in 1974 by Radiation International, and sold to the U.S. Government. The government sent the irradiators to Mexico as part of eradicating a devastating livestock parasite, the screwworm. The irradiators, being licensed as a Type B container, were subject to a significant design review and analysis to ensure the design complied with 10 CFR 71.73. With the passage of time, the NRC Certificate of Compliance (CoC) for use as shipping containers, CoC 9103, Revision 3 expired on June 30, 1991(Ref. 1). In order to allow for repatriation of the irradiators from Mexico back to the USA, a thorough review or the package was performed, with the U.S. Department of Energy (DOE) authorizing an exemption to allow a limited use/one time shipment of the Irradiators as Type B packages based on DOE Order 460.1C, *Packaging and Transportation Safety* (Ref. 2).

BACKGROUND

Screwworm Eradication

Adult screwworm flies are about twice the size of a housefly and have orange eyes and a bluish-green or grey body, with three dark stripes running down the back. A screwworm fly can lay as many as 2800 eggs on the open wounds of livestock during its 31-day lifespan. A screwworm larva grows by feeding on the flesh of its host, gouging into the animal for 5 to 7 days, until it reaches a size of just over ½ inch, at which time it drops to the ground. The larva tunnels into the soil, forms a protective case, and emerges as an adult fly from the pupa. A screwworm infestation can cause extensive damage to domestic livestock and other warm-blooded animals, and can kill grown cattle within 5 to 7 days.

In the early1950s, the U.S. Department of Agriculture (USDA) began a novel campaign using the sterile insect technique, based on use of Husman Irradiators, to rid the country of the screwworm—and the $400 million in losses it inflicted on livestock producers each year. The fly lays its eggs on the open wounds of warm-blooded animals and causes death if untreated. Since 1966, the U.S. has been free of the pest.

A total of 286,750 cases of screwworm infestation in warm-blooded animals were reported in Mexico between 1972 and 1990. Then technique was then exported to Mexico in the form of three Husman Irradiators. At the Tuxtla Gutierrez sterile fly facility (i.e., screwworm mass-rearing facility) located in Chiapa de Corzo in southern Mexico, 10 km from the city of Tuxtla Gutierrez, millions of screwworm flies were raised and while in the pupal stage, dosed with 5000–5500 rads of cesium- 137 for approximately 1 minute and 50 seconds. The radiation dose was designed to leave the flies normal, but sterile. The sterile male flies were released into the

wild during carefully planned airplane missions. They then mated with wild female flies that produce no viable eggs, and the population of flies was slowly reduced. In February 1991, after 15 years of production and the sterilization of 220 billion insects, Mexico was declared screwworm free. The screwworm rearing plant in Mexico, the only one of its kind, continued producing flies on a large scale for the eradication efforts under way in Central America until a new similar facility in Panama was opened.

Husman Irradiator Basic Description

Each Husman Irradiator is a cylindrical, steel-encased, lead filled, weldment consisting of two main units, the biological shield and a movable rotor. The main biological shield has a 5/8-inch outer carbon steel wall and a 3/8-inch thick inner stainless steel wall. A stationary center core is part of the main shield and is constructed of 3/8-inch thick stainless steel material. The movable rotor unit contains three specimen chambers spaced 120° apart. It consists of a 3/8-inch thick stainless steel housing filled with lead and rotates around the center core. Within the main shield, are three line sources, located 120° apart about the center of the irradiation position (the position where specimen capsules are rotated into place to be irradiated by the rotor assembly). The package is 36 ½-inches in diameter by 40 inches long. Each Husman Irradiator is welded to a base, constructed of structural steel I-beams and steel angle iron. The irradiator is held to the base by 4 legs, each leg being constructed of rectangular tube steel (8 inches length x 5 ½ inches width x ½ inches thick) (Ref. 3). Table 1 provides basic details associated with the Husman Irradiator (Ref. 3).

Table 1. Husman Irradiator Basic Description

Model No.	Quantity to be Transported	Approx. Dimensions (inches)	Weight (pounds)	Original Activity per Irradiator (Cs-137 Ci)	Current Activity per Irradiator (Cs-137 Ci)
521	3	54-5/16 x 42-3/8 x 45-29/32	18.5	46,800	18,220

There are six Cs-137 capsules enclosed in each Husman Irradiator. The Cs-137 is in the form of cesium chloride salt. Because of the unique solubility risks associated with cesium chloride, when constructed, these capsules were certified as meeting Special Form requirements, being doubly encapsulated in 316L stainless steel, and tested to meet leaktight criteria at the time of their construction. Each source originally contained 7,800 Ci of Cs-137. Adjusting for radioactive decay, with a Cs-137 half-life of 30 years, the total content of each Special Form Cs-

137 encapsulated source is 3,037 Ci of Cs-137, with an overall content per Husman Irradiator of 18,220 Ci of Cs-137. The Special Form capsules were loaded with Cs-137 chloride, with no neutron absorbers or moderators used in their construction (Ref. 3).

APPROACH/METHOD

The review largely focused on structural and containment analyses. The following were performed as part of the review:

- Detailed original design review
- Review of operational history and visually confirming non-degraded physical condition.
- Performing (updated) confirmatory analyses

REVIEW

Design Review

Each Husman Irradiator has a gross weight of 18,500 lb with a Center of Gravity located four inches above the geometric center of the cylindrical outer body. Confirmatory calculations were performed and indicated the actual weight at 15,000 lb and the CG to be slightly below the centerline. The 15,000 lb weight agrees with some of the original Type B certification documents for the Husman. The 18,500 lb value is also quoted in the original SARP documentation, but may include components that are not part of the shipping configuration for the Model 521 Husman Irradiator Package. The layout of the moveable rotor (slightly off-center) and the void space around the source positions (above centerline) results in the center of gravity being below the geometric centerline. Therefore, the analysis basis in the exemption was deemed conservative and acceptable (Ref. 3). The irradiator body, rotor assembly, center core, and source containers were all fabricated, examined, and tested to ASME VIII methods applicable at the time of fabrication and to other requirements applicable to a Category II package (Ref. 3).

The ASTM A516-60 carbon steel used in the outer walls, the 300 series stainless steel used on the inner components, the ASTM B29 lead and the ASTM A240-316L SST used for the source

containers are all appropriate and recognized codes commonly used for package construction (Ref. 3).

There are no compatibility concerns with the combinations of these materials and these materials are not susceptible to reduced effectiveness from the radiation environment, with testament from decades of actual operating experience.

The exemption request identifies the materials by ASTM specification, matching those listed on the original Type B SAR. The material properties listed in the structural section for the carbon steel and stainless steel were slightly different that the ASME Code minimums, but all structural analysis for the impacts were based on lead properties only. The lead strength listed was from the Cask Designers Handbook, as stated in the referenced structural calculations associated with the original license. Since the HAC drop calculations credit only the lead strength using property data from the Cask Designers Handbook, the listed material properties for other components were accepted (Ref.3).

Fabrication and Examination

The fabrication and examination of the Husman Irradiator Models M-001, M-002, and M-003 was stated on the originally approved and licensed Type B Package certification documents. These packages were fabricated and examined in accordance with ASME VIII. Full penetration welds were used throughout the lead shielded body and internal rotor. Each weld was subjected to 20 psi pressure checked to ensure the welds were gas tight. These weld fabrication and examination practices are consistent with current package design requirements and therefore acceptable.

The only new fabrication associated with the final shipment of the Husman were replacement bolts for the hardwood-core shipping plugs and a new shipping shim to position the plug in the inlet or outlet opening of the main body. Both the bolt and shim material were procured to ASTM specifications.

The review determined the original fabrication and examination acceptable. All new replacement items were fabricated/examined in a manner consistent with the original construction and in a manner that preserved the integrity of the package.

Lifting and Tie-Down Standards for All Packages

There are no integral lifting or tie-down devices on the package. The only features identified as being capable of being used as a tie-down are the four support legs. These structural features were evaluated within the exemption document. The stresses developed in the support legs and

irradiator body when subjected to the 10G longitudinal, 5G lateral and 2G vertical acceleration loads were computed, compared to allowable stress levels and shown acceptable to the requirements of §71.45 with large margin.

In both the original package certification documents and the current SPA exemption, the four support legs were evaluated for tie-down loads based on group action of the four legs. Although this is a common analysis approach, the review staff performed additional confirmatory analysis of the support legs. In the confirmatory analysis, the legs were conservatively treated as if behaving independently. The confirmatory calculations showed the structural support legs can withstand the §71.45 loadings with a maximum stress computed of 25 ksi, versus an allowable stress of 32 ksi for the carbon steel material. Therefore, the confirmatory analysis substantiated the conclusions made in the SPA(Ref.3).

Structural Evaluation

The Husman was certified as a Type B package based on structural evaluation by analysis. The analysis was based on the methods prescribed in ORNL's Cask Designer's Handbook. The calculations were detailed and thorough and addressed the NCT and HAC loadings prescribed in the CFR. The calculations evaluates loss of shielding effectiveness from impact deformation, G-loading on contents (Sealed Source canister), and structural integrity of the outer steel shell.

Confirmatory analysis was performed using a more detailed FEA simulation of the package (Ref. 4). In the confirmatory analysis, material strengths were based on actual ASME Code based stress-strain characteristic for the steel, and other published data for the lead, and the interactions between the individual components during impact could be simulated in more detail than the macro-level techniques in the Cask Designer Handbook.

The Husman Irradiator does not have any pressure retaining devices, other than the sealed source canisters. The containers are loaded at atmospheric pressure and have a pressure capacity exceeding pressure demands encountered during NCT and HAC.

<u>Normal Conditions of Transport</u>

The Husman Irradiators were originally evaluated for maximum and minimum NCT temperature conditions of -40°F and up to 150°F in still air with and without insolation. These conditions exceed the requirements of 10 CFR 71.71 (c)(1). None of the materials used, as the thicknesses specified, are subject to brittle fracture concerns at the CFR minimum NCT temperature. The SPA exemption included analysis for increased and reduced external pressure. The computed

stress levels were less than a few hundred psi, indicating large margin relative to the allowable stress of more than 20,000 psi (Ref. 3).

None of the components or materials of the Husman Irradiator that are sensitive to the shipping and transportation vibration levels encountered during NCT. The SPA exemption also cited past successful performance associated with shipping Irradiators to the operation locations. The review staff concurs and notes that the original shipments were followed by long operational service histories.

The NCT free drop condition of 3 ft was evaluated by comparison to the 30 ft HAC drop results. For and end of life shipment special authorization, the review concurred with the comparison.

The NCT penetration analysis was based on the original Type B license qualification. The 5/8 inch thick carbon steel outer wall was deemed more than sufficient to withstand the NCT penetration tests. The 9013 SAR analysis shows dents on the order of 0.01 inch to the 5/8 inch steel shell (Ref. 3).

Hypothetical Accident Conditions

Both the original Type B Package SAR analysis and the SPA exemption analysis for the 30 ft HAC drops were based on calculation methods from the Cask Designers Handbook. The Cask Designer's Handbook provides equations for estimating damage levels based on the bulk behavior of steel-lined lead shielded packages. The SPA exemption assessed package damage for Top Down, End Down and center of Gravity over top end package orientations. In addition to the assessment of the outer container, the structural analysis associated with the original Type B license evaluated internal components; including showing the source canister could withstand impact G levels of 2500 G.

A confirmatory analysis based on explicit Finite Element Analysis using ABAQUS software was used. The SPA evaluation considered top down drops, inclined drops (cg over corner) and end down drops. The confirmatory drops orientations evaluated were:

- Top Down Drop
- Side Down Drop
- Center of Gravity over Top Corner.

The results of the confirmatory FEA (Ref. 4) were in close agreement with the SPA exemption analysis in terms of deformation of the outer wall and lead. The analysis showed that the actual deformation of the outer body was the same as, or slightly less than, those predicted in the submitted SPA. Table 2 presents a comparison of the submitted analysis results versus the

confirmatory FEA. The FEA analysis also showed that the impacts are absorbed in a smooth linear fashion, with G levels not exceeding a few hundred G's. This behavior is attributable to the soft lead being the main energy absorber. The kinetic energy history for each drop is indicative of a smooth, continuous deceleration.

Figures 2-1 through 2-4 show the confirmatory analysis results for the HAC top down drop configuration. Figures 2-5 through 2-8 show results for the side down drop, and Figures 2-9 through 2-13 show results for the CG over top edge drop.

Table 2-1 Comparison of SPA Submittal Results and Confirmatory FEA Results.

	SPA Exemption		**Confirmatory Analysis**		
	Deformation	Minimum Remaining Lead	Deformation	G Level	Shell Integrity
Top Down	2.6 inch	6.4 inch	2.7 inch	228 G	Intact
End Down	1.3 inch	5.7 inch	NA	NA	NA
Side Down	5.9 inch	4.6 inch	4.2 inch	144 G	Intact
CG over Corner	NA	NA	2.0 inch	195 G	Intact

<u>HAC Drop, Top Down Orientation</u>

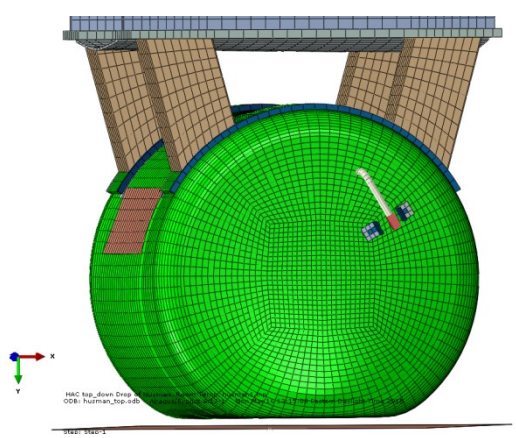

Figure 2-1 Husman Irradiator After Top Down HAC Drop Simulation.

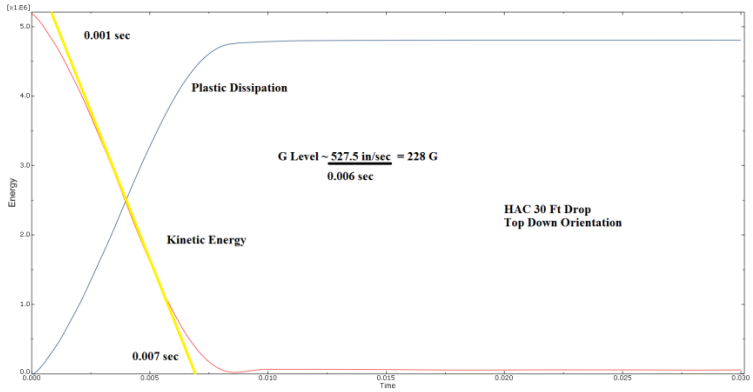

Figure 2-2 Kinetic and Plastic Energy Histories from Confirmatory FEA of Husman Irradiator, HAC Top Down Drop.

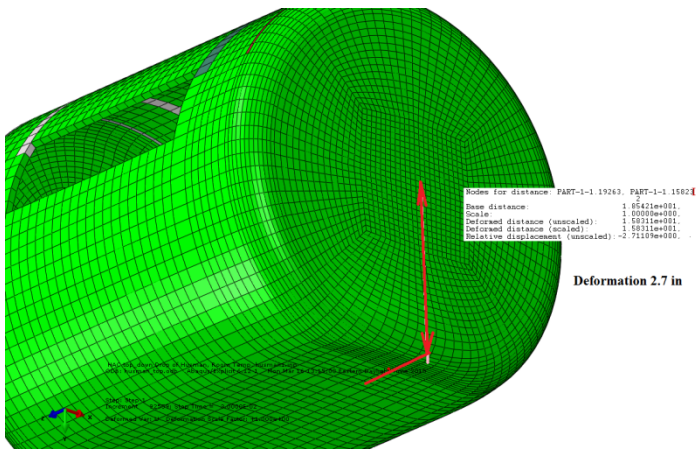

Figure 2-3 Measured Deformation from Confirmatory FEA of Husman Irradiator, HAC Top Down Drop, Showing 2.7 inch.

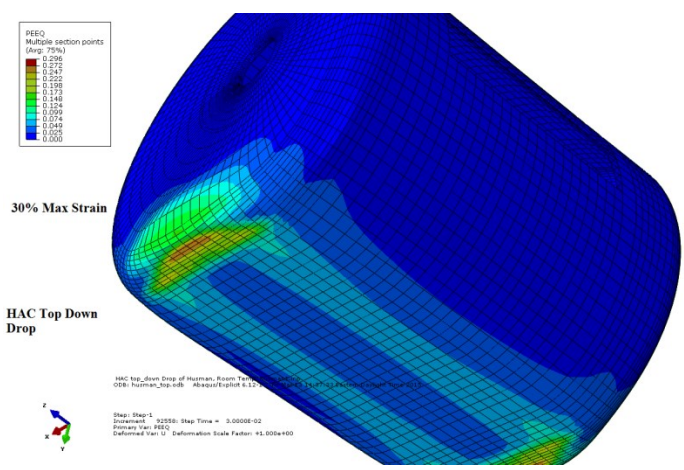

Figure 2-4 Outer Shell Strains from Confirmatory FEA of Husman Irradiator, HAC Top Down Drop, Showing 30% Max Strains Locally.

HAC Drop – Side Down Orientation

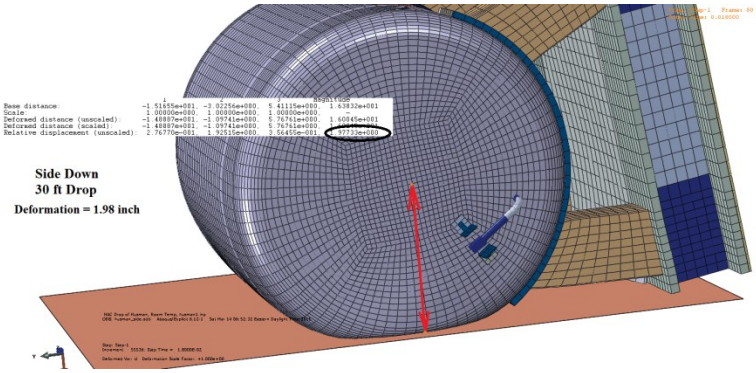

Figure 2-5 Husman Irradiator After Side Down HAC Drop Simulation, Quantifying Deformation.

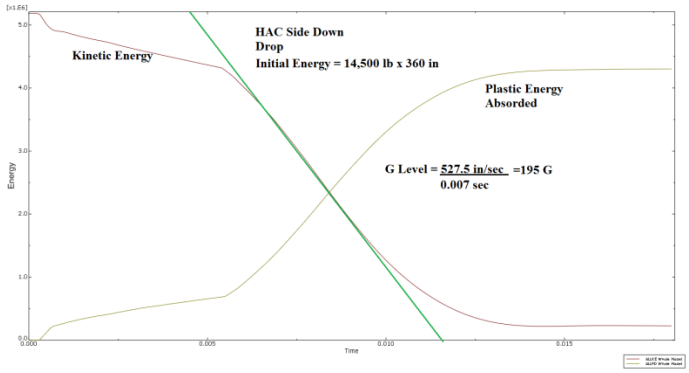

Figure 2-6 Kinetic and Plastic Energy Histories from Confirmatory FEA of Husman Irradiator, HAC Side Down Drop.

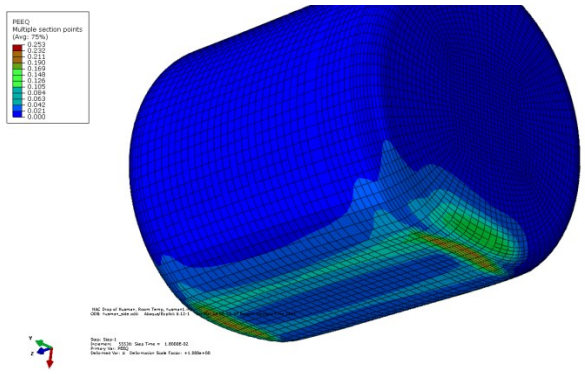

Figure 2-7 Outer Shell Strains from Confirmatory FEA of Husman Irradiator, HAC Side Down Drop, Showing 25% Max Strains Locally.

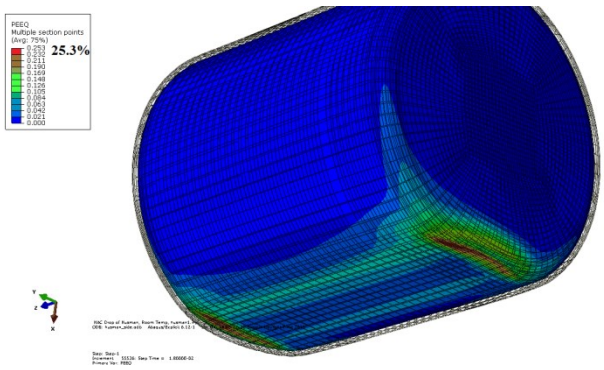

Figure 2-8 Outer Shell Strains (Showing Inside Surface of Metal) from Confirmatory FEA of Husman Irradiator, HAC Side Down Drop, Showing 25% Max Strains Locally.

<u>CG over Top Corner</u>

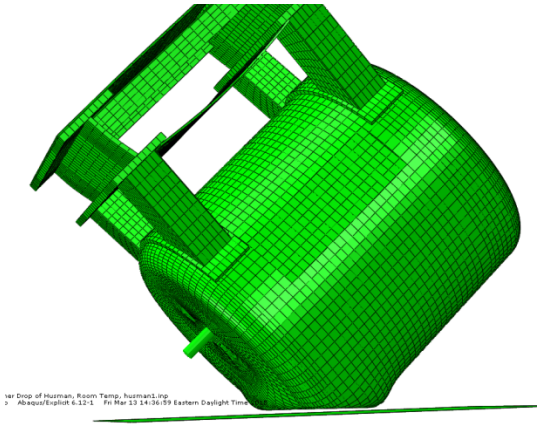

Figure 2-9 Husman Irradiator After CG over Edge HAC Drop Simulation.

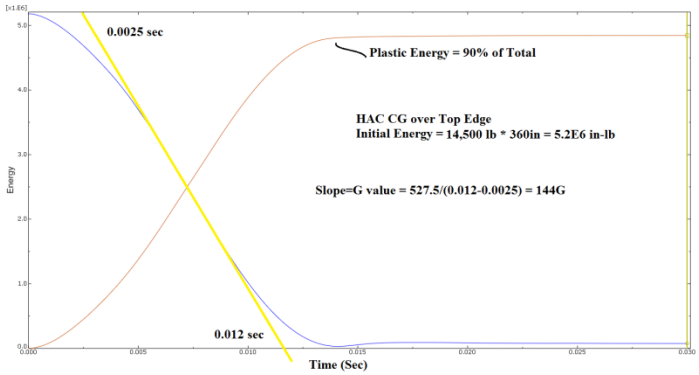

Figure 2-10 Kinetic and Plastic Energy Histories from Confirmatory FEA of Husman Irradiator, HAC CG over Edge Drop

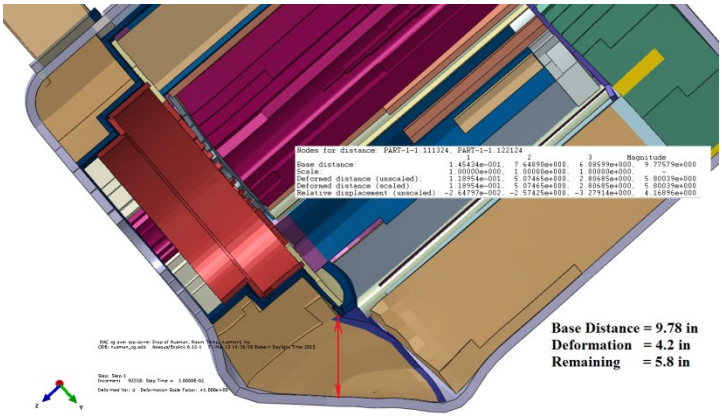

Figure 2-11 Husman Irradiator After CG over Edge HAC Drop Simulation, Quantifying Deformation.

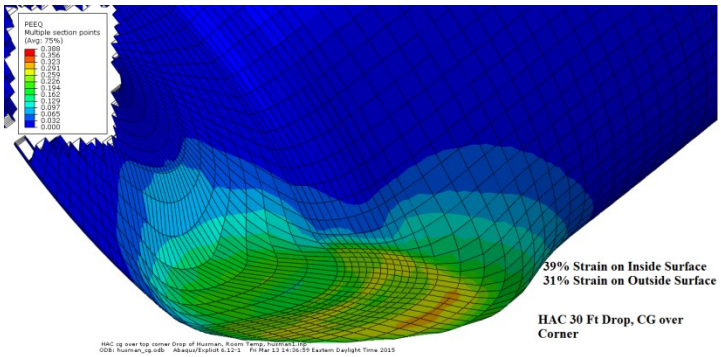

Figure 2-12 Outer Shell Strains (Showing Outside Surface of Metal) from Confirmatory FEA of Husman Irradiator, HAC CG over Edge Drop, Showing 31% Max Strains Locally.

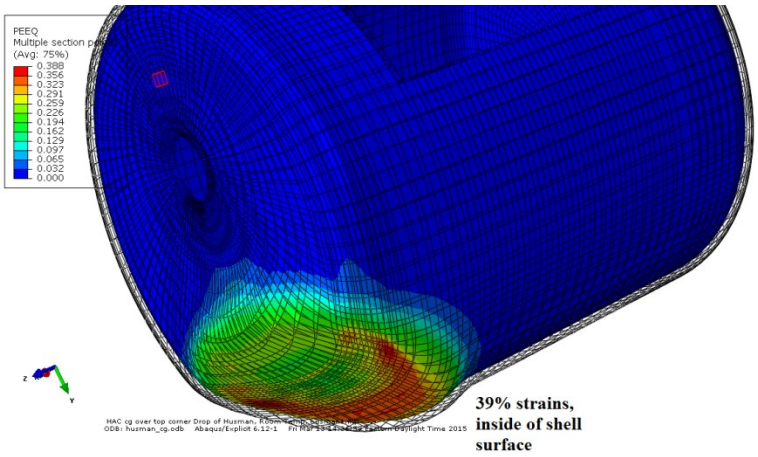

Figure 2-13 Outer Shell Strains (Showing Inside Surface of Metal) from Confirmatory FEA of Husman Irradiator, HAC CG over Edge Drop, Showing 39% Max Strains Locally

Puncture

The review concurred with the submitted analysis that the 5/8 inch carbon steel is adequate to withstand the puncture tests.

Thermal

The review evaluated the HAC thermal event based on conservative, simplified methods. The analysis showed that the source capsules can withstand the internal pressures generated during the HAC fire. The thermal analysis for computing pressure demand was reviewed and found acceptable. The stress capacity of the source containers was verified by confirmatory calculations [10] to confirm acceptability of the submitted calculations.

Containment

The Husman Irradiators were originally manufactured by under Package Identification No. USA/9013/BL.

The radioactive material in each Husman Irradiators is contained within a robust pressure vessel (Ref. 5). The special form capsules were evaluated for containment under normal and accident conditions (Ref. 2).

The initial design drawings were reviewed. Acceptance testing of these sealed sources showed they met the leak rate requirement of $< 1x10^{-6}$ cm^3/min at the time of fabrication. The most recent leak tests (performed by the United States Department of Agriculture as late as 2012 (Ref. 6), were also reviewed, showing no potential changes in the containment were observed. Gas generation (time to 5% Hydrogen) was not reviewed because there are no noted changes to the contents, and the original gas generation calculations performed as part of USA/9013/BL would remain valid. The submittal maximum leak rate (in terms of A_2) under NCT and HAC were also reviewed and found to be acceptable.

The operational history of the Husman Irradiators shows they were operated and stored indoors. All are regularly monitored on a scheduled basis for changes in dose rate and any detectable contamination (Ref. 6). Records indicate the units are in excellent condition, stable, and free of any evidence of corrosion or radioactive contamination, thereby establishing the integrity of the Cs-137 special form capsules.

Based on the historical leak test data, the packages were determined to have maintained their containment integrity, and under both normal and hypothetical accident conditions can be expected to comply with the regulatory allowable radioactive material release limits.

CONCLUSION

After more than a decade passing since playing a critical role in helping Mexico successfully eradicate the devastating parasitic screwworm, three Husman irradiators near Chiapas Mexico can be repatriated to the USA, after being shown to meet the current Type B transportation requirements.

At the time of design and manufacture each irradiator was subjected to significant review and analysis to ensure compliance with 10 CFR 71.73, with each package demonstrated to be able to withstand the prescribed hypothetical accidents. The NRC Certificate of Compliance (CoC) for use as shipping containers, expired on June 30, 1991. With each irradiator being large and weighing over 16,000 pounds, reconfiguration of the contents or re-packing into currently certified Type B over packs was deemed to neither be feasible or safe to perform due to the location and radioactive content of the Husman Irradiators.

After: 1) a design review; 2) a review of the history of safe use of the Husman Irradiators for transport; and, 3) a focus on confirmatory structural analyses, it was determined that authorizing a one-time shipment shipping of the subject Husman Irradiators to their disposal location would ensure equivalent safety and meet the requirements specified in DOE Order 460.1C, thereby allowing for the exemption.

REFERENCES

1.) Nuclear Regulatory Commission, Certificate 9013, Rev. 3, USA 9013/B/( ), August 20, 1986.

2.) DOE Order 460.1C, *Packaging and Transportation Safety*, May 14, 2010

3.) *Request for DOE Exemption for Model No. 521 Husman Irradiators Serial Numbers: M-001, M-002, AND M-003,* Idaho National Laboratory, Battelle Energy Alliance, Revision1, May 2015

4.) M-CLC-A-00522, Confirmatory Structural Analysis for Husman Irradiator Special Exemption Authorization, Rev 0, Dated April, 2015.

5.) *Cs-137 Source Design*, Oak Ridge National Laboratory, Union Carbide Corporation, SK-342, Rev C.

6.) Leak Test Records from the United States Department of Agriculture, July 2009 to July 2012, for Husman Irradiators, SN's M-001, M-002, M-003.