Contract No:

This document was prepared in conjunction with work accomplished under Contract No. DE-AC09-08SR22470 with the U.S. Department of Energy (DOE) Office of Environmental Management (EM).

Disclaimer:

This work was prepared under an agreement with and funded by the U.S. Government. Neither the U. S. Government or its employees, nor any of its contractors, subcontractors or their employees, makes any express or implied:

1) warranty or assumes any legal liability for the accuracy, completeness, or for the use or results of such use of any information, product, or process disclosed; or
2) representation that such use or results of such use would not infringe privately owned rights; or
3) endorsement or recommendation of any specifically identified commercial product, process, or service.

Any views and opinions of authors expressed in this work do not necessarily state or reflect those of the United States Government, or its contractors, or subcontractors.

CALCULATION OF DE MINIMIS QUANTITIES OF RADIOACTIVE ISOTOPES FOR THE 9977 SHIPPING PACKAGE

S. J. Nathan (Savannah River Nuclear Solutions)
G. A. Abramczyk, J. S. Bellamy (Savannah River National Laboratory)
Savannah River Site, Aiken, SC 29808

ABSTRACT

The 9977 Safety Analysis Report for Packaging presently states: "…small concentrations (<1000 ppm each) of other actinides, fission products, decay products, and neutron activation products are permitted." External reviewers questioned the adequacy of this description leading to an analysis to determine de minimis quantities of radioactive material that can be included with content shipped in the 9977 shipping package. The de minimis quantity of radioactive material that can be shipped in a 9977 shipping package is determined by calculating the dose rate at the surface of the package for: An initial quantity of one gram of each radioactive isotope considered modeled as a sphere placed at the bottom of the containment vessel (CV) or at the side of the CV aligned with the centerline of the finger hole in the lower load distribution fixture (LDF), One gram of each actinide radioactive source mixed with 100 grams of plutonium oxide at the same locations, Varying masses of beryllium mixed with plutonium metal (100 to 4400 grams). The de minimis mass is calculated by allowing the radioactive isotope to contribute 1 mrem/hr to the dose rate at the surface of the package. For the pure isotope sources, the calculation is repeated with the new mass to determine if the change in size of the source impacts the calculated dose rate. The calculations are repeated until the calculated dose is below 1 mrem/hr. The calculation is divided into two sets of radioactive isotopes: decay/fission products (23 elements) and actinides (25 elements). The radiation source term was characterized using ORIGEN-ARP and MCNP 6.1 was used to determine absorbed dose rates outside the package. The de minimis quantity of light element impurities that can be shipped in a 9977 shipping package is determined by calculating the dose rate at the surface of the package for varying amounts of beryllium intimately mixed with varying mass plutonium metal spheres.

INTRODUCTION

The 9977 general purpose fissile material shipping package was designed to ship plutonium and highly enriched uranium metal and oxide within the U.S. Department of Energy (DOE) complex. The current version of the Safety Analysis Report for Packaging (SARP) supports the transport of several different content envelopes.

The 9977 SARP originally stated: "…small concentrations (<1000 ppm each) of other actinides, fission products, decay products, and neutron activation products are permitted. Assessment of these impurities may be based on process knowledge." The 9977 SARP also allowed "inorganic material impurity quantities of less than 100 ppm each are permitted as long as the total mass is less than 0.1 weight percent of the total content mass". The Technical Review Team reviewing the latest revision to the SARP requested that these statements be replaced by a more definitive list of the allowed impurities. A previous analysis (PCP-2014-0001, Rev. 1) evaluated a set of 23

decay/fission products and a set of 11 actinide isotopes. The current analysis repeats and expands that analysis to include 14 additional actinide isotopes with half-lives greater than ½ month.

METHOD OF ANALYSIS

The de minimis mass is calculated by allowing the radioactive isotope to contribute no more than 1 mrem/hr to the dose rate at the surface of the package. For the pure isotope sources, the calculation is performed with various masses to determine if the change in size of the source impacts the calculated dose rate. The calculations are repeated until the calculated dose is below 1 mrem/hr.

The calculation is divided into two sets of radioactive isotopes: decay/fission products and actinides listed in Table 1. The half-life values and element densities are taken from Nuclides and Isotopes Chart of the Nuclides or MatWeb Material Property Data.

The de minimis quantity of light element impurities that can be shipped in a 9977 shipping package is determined by calculating the dose rate at the surface of the package for varying amounts of beryllium intimately mixed with varying mass plutonium metal spheres. Beryllium is used as the bounding light element impurity.

The radiation source term was characterized using ORIGEN-ARP (ORNL/TM-2005/39). The MCNP 6.1 code package (LA-CP-13-00634) was used for three-dimensional Monte Carlo transport calculations to determine absorbed dose rates outside the package.

GEOMETRIC MODEL

The 9977 package (Figure 1) consists of a stainless steel outer shell with a stainless steel liner, insulation, aluminum load distribution fixtures (LDF), a 6-inch stainless steel containment vessel (CV), and miscellaneous other hardware. The MCNP input decks from Lawrence Livermore National Laboratory were used for sources in the CV, and modified to include lead, polyethylene, and tungsten shielded containers (SC1, SC2, and SC3). Twelve configurations are analyzed:

- Decay/fission products or actinides at the bottom of the CV
- Decay/fission products or actinides at the side of the CV centered on the bottom LDF finger hole
- Decay/fission products or actinides mixed with 100 grams of plutonium as oxide at the side or the bottom of the CV
- Decay/fission products or actinides mixed with 100 grams of plutonium as oxide at the side of the CV centered on the bottom LDF finger hole
- Decay/fission products at the bottom of the SC1
- Decay/fission products at the side of the SC1 centered on the bottom LDF finger hole
- Decay/fission products at the bottom of the bottom of the SC3
- Decay/fission products at the side of the SC3 centered on the bottom LDF finger hole
- Actinides at the bottom of the SC2
- Actinides at the side of the SC2 centered on the bottom LDF finger hole

- Beryllium (0.01 to 5 grams) mixed in plutonium metal (100 to 4400 grams) at the bottom of the CV
- Beryllium (0.01 to 5 grams) mixed in plutonium metal (100 to 4400 grams) at the side of the CV centered on the bottom LDF finger hole

Dose rates at the top of the package due to sources at the top of the CV were not analyzed since previous evaluations have demonstrated that they are significantly lower than the dose rate at the side or bottom of the package.

Table 1 Radioactive Isotopes

Isotope	Half Life		Density (g/cc)	Isotope	Half Life		Density (g/cc)
Decay and Fission Product Isotopes				Actinide Isotopes			
Cd-109	461	days	8.65	Ac-227	221.772	years	10.07
Co-60	77.3	days	8.9	Am-241	432.7	years	13.57
Cs-137	30.07	years	1.873	Am-243	7.37E+03	years	13.57
Eu-152	13.54	years	5.244	Bk-247	1.40E+03	years	13.25 [a]
Fe-59	44.9	days	7.874	Bk-249	330	days	13.25 [a]
Gd-153	241.6	days	7.901	Cf-252	2.646	years	15.1 [a]
Hf-181	42.4	days	13.31	Cm-244	18.1	years	13.5
Ho-166m	1200	years	8.795	Cm-248	3.48E+05	years	13.5
Ir-192	73.83	days	22.42	Es-254	276	days	8.84 [a]
Mn-54	312.1	days	7.82	Es-255	40	days	8.84 [a]
Pb-210	22.3	years	11.35	Np-237	2.14E+06	years	20.25
Pm-147	2.6234	years	7.264	Pa-231	2.38E+04	years	15.37
Po-210	138.38	days	9.32	Pu-236	2.87	years	19.84
Ra-226	1599	years	5	Pu-238	87.7	years	19.84
Ru-106	1.02	years	12.41	Pu-239	2.41E+04	years	19.84
Sc-46	83.81	days	2.989	Pu-240	6.56E+03	years	19.84
Se-75	119.78	days	4.7	Pu-241	14.29	years	19.84
Sm-145	340	days	7.52	Pu-242	3.75E+05	years	19.84
Sr-90	28.78	years	2.54	Pu-244	8.00E+07	years	19.84
Tm-170	128.6	days	9.321	Th-227	18.68	days	19.84
Yb-169	32.03	days	6.903	Th-228	1.912	years	11.72
Zn-65	243.8	days	7.133	Th-229	7.30E+03	years	11.72
Zr-95	64.02	days	6.506	Th-230	7.54E+04	years	11.72
				Th-232	1.40E+10	years	11.72
				Th-234	24.1	days	11.72

[a] Density from MatWeb Material Property Data

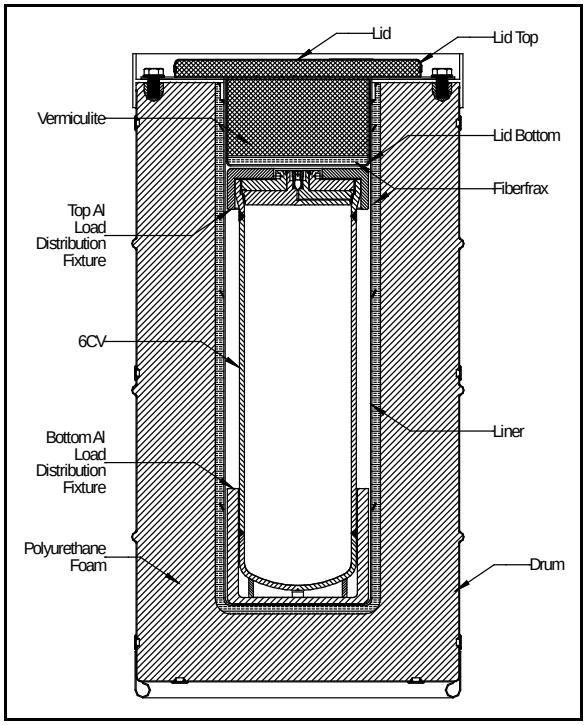

Figure 1. Model of 9977

The source is modeled as a sphere located at either the bottom of the CV or against the side of the CV centered on the finger hole in the bottom LDF. The source radius is calculated from the mass of pure isotopes as:

$$r = \sqrt[3]{\frac{\frac{M}{\rho}}{\frac{4}{3}\pi}}$$

Where:

r	is the radius of the sphere (cm)
M	is the mass of the isotope (g)
ρ	is the density of the isotope (g/cc)

For the case of isotopes mixed with 100 grams of plutonium as oxide, the radius (1.332 cm) is based on 113.44 grams of PuO_2 with a density of 11.46 g/cc.

The position of the sphere relative to the bottom of the CV is given by:

$$x = 0, \qquad z = 13.6150 + r\ \ CV$$
$$z = 22.5459 + r\ \ SC1$$
$$z = 22.8633 + r\ \ SC2$$
$$z = 22.7363 + r\ \ SC3$$

The position of the sphere relative to the bottom LDF finger hole is given by:

$$x = 7.70255 - r, \qquad z = 24.9682 \;\; CV$$
$$x = 2.0637 - r, \qquad SC1$$
$$x = 3.1749 - r, \qquad SC2$$
$$x = 1.6891 - r, \qquad SC3$$

RADIATION SOURCES AND HEAT GENERATION RATES

Radiation source spectra and strengths were derived using the ORIGEN-ARP computer code to analyze one gram of each isotope listed in **Table 1** to build in daughters and to calculate the photon and neutron sources as a function of energy and decay time for 100 years. Additional cases are analyzed with the radioactive source mixed with the 13.442 grams of oxygen in 100 grams of plutonium as oxide (PuO_2). Excel was used to determine the maximum source in each group as a function of decay time. The maximum in each group was used as the source spectrum for MCNP calculations.

Only the alpha-n sources are calculated for plutonium mixed with beryllium since the dose rate increase from adding light elements is being calculated.

RADIATION TRANSPORT

Radiation transport calculations were performed using MCNP6.1. The normalized source spectra were input into MCNP as histograms. The source strength was used as a multiplier, internal in MCNP, to convert the MCNP-calculated dose rates from units of rem/hr per source particle started to total dose rate (rem/hr). The flux-to-dose-rate conversion factors used were those recommended by ANSI/ANS-6.1.1-1977, *Neutron and Gamma-Ray Flux-to-Dose-Rate Factors*. The values from the 1977 version of the standard were used rather than those from the 1991 version of the standard because the neutron dose conversion factors in the 1977 version more closely reflect those provided in 49 CFR 173.403, and the photon dose conversion factors in the 1977 version more closely correspond to the response measured by instrumentation.

Point detectors were modeled adjacent to the package:

- At the side vertically centered on the bottom LDF finger hole for sources located at the side of the CV or the shielded container
- On the centerline at the bottom for sources located at the bottom of the CV or the shielded container

ENDF/B-VII cross-section sets for transport calculations were used.

MCNP simulations of some radionuclides (e.g. Gd-153, Pb-210, Pm-147, Se-75, Yb-169) did not always meet each of the built in statistical checks as a result of their soft and/or disparate gamma emission spectra. Due to the wide variety of nuclides and configurations modeled, problem specific source biasing and variance reduction was limited to the use of point detectors (next event estimator tallies). Without custom biasing techniques, perfect detector convergence becomes impossible for some shielding simulations. Despite poor counting statistics, the results were reported once these models were run sufficiently to determine that the tally mean was stable and that the resultant dose rates were not expected to change. Furthermore, inclusion of three fractional standard deviations in

the reported dose effectively guarantees a conservative projection of allowable mass, particularly for cases with relatively high statistical error.

CONCLUSIONS

De minimis values have been calculated for 23 decay/fission products (Cd-109, Co-60, Cs-137, Eu-152, Fe-59, Gd-153, Hf-181, Ho-166m, Ir-192, Mn-54, Pb-210, Pm-147, Po-210, Ra-226, Ru-106, Sc-46, Se-75, Sm-145, Sr-90, Tm-170, Yb-169, Zn-65, Zr-95) in the containment vessel, Shielded Container 1 or Shielded Container 3; and 25 actinides (Ac-227, Am-241, Am-243, Bk-247, Bk-249, Cf-252, Cm-244, Cm-248, Es-254, Es-255, Np-237, Pa-231, Pu-236, Pu-238, Pu-239, Pu-240, Pu-241, Pu-242, Pu-244, Th-227, Th-228, Th-229, Th-230, Th-232, Th-234) in the containment vessel or Shielded Container 2. Table 2 and Table 3 present the results.

The de minimis amount of beryllium that can be added to plutonium content has been calculated as 1.52 milligrams. This value bounds all light elements that could produce neutrons from (α-n) interactions.

Table 2 Mass Limits for Decay/Fission Product Isotopes

Isotope	Mass (g)		
	CV	SC1	SC3
Cd-109	6.65E-05	3.18E+02	1.75E+02
Co-60	1.29E-08	1.98E-06	2.11E-06
Cs-137	6.54E-07	8.39E-03	3.41E-03
Eu-152	1.81E-07	4.74E-05	4.47E-05
Fe-59	6.19E-10	1.33E-07	1.09E-07
Gd-153	9.32E-07	2.91E+02	1.59E+02
Hf-181	3.91E-09	2.89E-03	3.62E-04
Ho-166m	1.21E-05	2.38E-02	1.32E-02
Ir-192	4.14E-09	3.35E-04	1.37E-04
Mn-54	4.96E-09	5.66E-06	3.50E-06
Pb-210	6.68E-05	2.41E+00	2.83E-01
Pm-147	2.35E-03	2.67E+02	1.47E+02
Po-210	9.22E-04	1.28E+00	4.72E-01
Ra-226	2.15E-05	3.22E-03	3.19E-03
Ru-106	3.20E-08	3.44E-05	2.84E-05
Sc-46	5.11E-10	2.36E-07	1.75E-07
Se-75	7.28E-09	6.63E-01	3.66E-02
Sm-145	3.42E-04	2.77E+02	1.52E+02
Sr-90	5.21E-06	1.11E-02	9.99E-03
Tm-170	1.27E-06	4.02E-01	1.04E-01
Yb-169	1.12E-08	1.14E-01	1.94E-01
Zn-65	7.53E-09	2.23E-06	1.75E-06
Zr-95	1.90E-09	6.44E-06	3.12E-06

Table 3 Mass Limits for Actinide Isotopes

Isotope	Mass (g)	
	CV	SC2
Ac-227	1.16E-06	3.64E-06
Am-241	5.73E-01	3.96E+00
Am-243	1.98E-03	7.30E-03
Bk-247	3.87E-04	1.39E-03
Bk-249	2.57E-05	8.08E-05
Cf-252	6.28E-09	2.73E-08
Cm-244	1.32E-03	5.96E-03
Cm-248	3.74E-04	1.75E-03
Es-254	2.07E-08	5.86E-08
Es-255	1.67E-07	8.40E-07
Np-237	5.95E-01	2.63E+00
Pa-231	1.94E-03	6.40E-03
Pu-236	1.47E-06	4.10E-06
Pu-238	2.73E+00	9.71E+00
Pu-239	2.15E+02	9.00E+02
Pu-240	1.20E+01	6.37E+01
Pu-241	3.70E-01	2.72E+00
Pu-242	9.12E+00	3.98E+01
Pu-244	4.63E+00	1.68E+01
Th-227	4.93E-09	1.54E-08
Th-228	3.44E-08	9.72E-08
Th-229	6.94E-04	2.24E-03
Th-230	2.58E-02	7.47E-02
Th-232	4.68E+02	5.61E+02
Th-234	2.79E-08	7.22E-08

REFERENCES

ANSI/ANS-6.1.1-1977, *Neutron and Gamma-Ray Flux-to-Dose-Rate Factors*, American Nuclear Society, LaGrange Park, IL, March 1977.

LA-CP-13-00634, Rev. 0, *MCNP6™ USER'S MANUAL*, Pelowitz, D.B., Ed., Los Alamos National Laboratory, Los Alamos, NM, May 2013.

MatWeb Material Property Data, http://matweb.com/search/searchproperty.asp accessed August 5, 2015. [pertinent sheets attached as Appendix B]

Nuclides and Isotopes Chart of the Nuclides, Seventeenth Edition, Baum, E.M., et al, Knolls Atomic Power Laboratory, Schenectady, NY, 2009.

ORNL/TM-2005/39, Version 6.1, Sect. D1, *ORIGEN-ARP: Automatic Rapid Processing For Spent Fuel Depletion, Decay, and Source Term Analysis*, Oak Ridge National Laboratory, Oak Ridge, TN.

PCP-2014-0001, Rev. 1, *Functional Bounding Content Envelope for Gamma and Neutron Emitting Isotopes in the Model 9977 Packaging*, Sitaraman, S., Soon, S.K., and Anderson, B.L., Lawrence Livermore National Laboratory, Livermore, CA, August 2014.