SRL 670345
RECORD COPY

DP-MS-83-43

LABORATORY ROBOTICS SYSTEMS AT THE SAVANNAH RIVER LABORATORY

~~SRL FILE COPY~~

by

Gregory M. Dyches and Syderis D. Burkett

E. I. du Pont de Nemours & Co.
Savannah River Laboratory
Aiken, South Carolina 29808

A paper proposed for presentation at the
Eastern Analytical Symposium
New York, NY
November 16-18, 1983
and for publication in the proceedings of the symposium

This paper was prepared in connection with work done under Contract No. DE-AC09-76SR00001 with the U.S. Department of Energy. By acceptance of this paper, the publisher and/or recipient acknowledges the U.S. Government's right to retain a nonexclusive, royalty-free license in and to any copyright covering this paper, along with the right to reproduce and to authorize others to reproduce all or part of the copyrighted paper.

DP-MS-83-43

LABORATORY ROBOTICS SYSTEMS AT THE SAVANNAH RIVER LABORATORY*

by

Gregory M. Dyches and Syderis D. Burkett

E. I. du Pont de Nemours & Co.
Savannah River Laboratory
Aiken, South Carolina 29808

INTRODUCTION

The Savannah River Laboratory (SRL) is applying robotics and state of the art automation throughout the research and production areas of the Savannah River site. A Robotics Technology group was formed in August 1982 to investigate and define potential applications and design and develop feasible robotics solutions. Current staffing of this group is five career professionals with expertise in electrical engineering, mechanical engineering, and nuclear physics. Initial robotics applications are concerned with handling of radioactive materials. Future applications include storage/retrieval systems for radioactive material and machine support in the process areas (i.e. material transfer, machine loading/unloading, etc.).

* The information contained in this article was developed during the course of work under Contract No. DE-AC09-76SR00001 with the U.S. Department of Energy.

There are three major categories of applications: remote handling robots, mobile robots, and chemical procedure automation applications. In the area of remote handling robots, development work is currently underway for the following applications:

- Packaged contaminated waste removal from a standard process glove box using a GCA/PaR Model 300V robot.
- Automated radioactive liquid sample handling utilizing a unique Cartesian coordinate system robot to insert and remove shielded sample carriers to/from sample boxes.
- Loading of shielded sample cells using an articulated arm robot traveling on a one axis track.

Mobile robots are being applied to the following applications areas:

- Retrieval of nuclear reactor fuel tubes or pieces of tubes from high radiation environments.
- Radiation monitoring of laboratory areas to detect spills and assist in cleanup using a low cost robot.

SRL is also actively involved in applying robotics to automate standard laboratory chemistry procedures using the Zymate Laboratory Automation System[1] from Zymark Corporation. Seven procedures that have been or are currently being automated are:

- Filling dilution vials for sample dilutions
- Alpha plate preparation
- Gamma tube preparation
- Free acid determination

- PuTTA
- pH Titration
- Pipette calibration

The discussion that follows describes these chemistry automation applications in more detail.

ROBOTIC JUSTIFICATION

The prime justification for robotics in the chemistry applications is the reduction of personnel radiation exposure and minimization of chemical accident potential. Most process areas at SRL and Savannah River Plant (SRP) involve handling radioactive materials in various forms. Manually handling these materials subject the operator to minor radiation hazards. Total radiation exposure for a technician performing a typical procedure is about 200 mrem per year. While this is well below DOE limit of 5000 mrem per year, robotics will serve to further reduce this number. Some of the chemistry procedures involve handling other hazardous chemicals (e.g. nitric acid). The potential for chemical burns or ingestion if toxic materials is also reduced via robotics.

A secondary justification for robotics in our applications is to improve quality assurance in sample analysis. Due to the quantities of samples handled, some of the procedures are monotonous and therefore error prone and undesirable. Robotics serves to relieve the operator of such jobs. By eliminating human error in solution preparations, measurements, and results logging, the quality of the analysis is increased.

Reduction of personnel and cost savings are minor justifications in our initial applications. A cost analysis is given in this paper for a typical robotic application.

APPLICATION DISCUSSION

Dilution Vial Filling

Approximately 8,000 to 10,000 vials per month are filled with various volumes of 2M or 3M HNO_3, NaF, NaI, or 2.8M $Al(NO_3)_3$. These vials are used by laboratory technicians to dilute radioactive samples from the uranium and plutonium chemical separations process. This is done to minimize radiation exposure during further sample analysis. The filling operation uses either a 2 dram screw cap glass vial or a 30 ml screw cap plastic vial. The Zymate system (Figure 1) transfers vials between work stations. Two Zymark parallel gripper hands are used with fingers contoured to fit each of the two size vials. The Master Laboratory Station dispenses the required volumes of each solution. Volumes dispensed range from 1 ml to 20 ml. Dispensed volume must be repeatable to $\pm$0.2 of total volume. A Mettler PK300 balance statistically checks one in 20 vials prior to and after filling to ensure correct dispensing. A platinum RTD is interfaced to the Zymate system via the analog to digital converter (ADC) supplied with the Zymark Power and Event Controller. The temperature of the solution reservoir is monitored ($\pm$0.1 C) to correct the measured weight for variations due to the temperature dependence of HNO_3 density. Up to three precision vial trays can be positioned within the robot

workcell. These are quickly fixtured and removed by using special quick release clamping stands. The small vial tray has a capacity of 118 small vials and the large vial tray can hold 54 large vials.

A special capping station was designed so that the two size screw cap vials could be automatically capped. This consists of a vibratory bowl (500 cap capacity) feeder for orienting and feeding caps to a singulating cap track. The bowl vibrates and the caps have a tendency to travel along a special track that spirals upward along the inside perimeter of the bowl. Only caps that are oriented properly are fed out at the top of the bowl. The vial to be capped is placed in a V-slotted vial fixture by the robot and then released. An AC solenoid transfers the vial under the cap track, a cap is loosely placed on the vial and the vial is then transferred and clamped directly under the screw capper. The vial cap is screwed on and the vial is released so that the robot can access it. The capping process takes approximately 10 seconds per vial. The capper is interfaced through the Power and Event Controller's digital I/O.

Typical operation for this system is as follows (Figure 2):

1. The operator fills the trays with empty uncapped vials and clamps the trays to the work table.
2. The operator then starts the application program via the Zymate Controller keyboard. He enters parameters such as the type and number of trays to be filled and the volume and type solution to be dispensed.

3. The system then proceeds to fill and cap vials (check weighing some vials) until all trays are filled. Vials are sequentially moved from each tray location to the fill nozzle of the MLS, to the capping station, and back to the tray storage location. Any unacceptable vials are placed in the vial reject rack for manual inspection by the operator. Presently only improperly capped vials are rejected.
4. If an unrecoverable error occurs (weight out of limits e.g.) the system stops and prints out an appropriate error message.
5. At the completion of the sequence a logging report is printed listing number of vials filled, average weight and standard deviation, and number of rejects.
6. The operator then removes the trays, fixtures new trays to the table, and the procedure can be repeated.

Free Acid Determination

One method in widespread use at both SRL and SRP is the determination of free acid concentration using a standard addition technique. By an incremental addition of standard acid, there is a two-fold increase in solution acid concentration. This corresponds to approximately a 20 mV potential change. The Nernst equation is used to calculate sample free acid concentration. This technique has been successfully adapted using the Zymate system coupled with a Commodore 4032 microcomputer (Figure 3). The robot controller performs operations of pipetting aliquots of sample and standard, activating addition and removal of complexing reagent in a

stationary sample cell, and sequencing data transfer between the Zymate controller and the Commodore computer. The Commodore performs operator interaction, obtains stabilized potential readings from a millivolt meter (Orion Model 701A), calculates sample concentration, and provides hardcopy printout. Optionally, the Orion meter can be connected to the Zymate Power and Event Controller via the ADC input. A special interface was designed to accommodate this.

The sequence of robot actions is as follows (Figure 4):

1. The complexing reagent is added to the stationary sample cell located on the magnetic stirrer using the peristaltic pump.
2. Robot uses the Zymate syringe hand (two sizes available for use) and installs a disposable syringe tip from the tip rack.
3. A sample aliquot is taken from a vial in the sample tray and placed in the stationary sample cell on the magnetic stirrer.
4. The solution is stirred and the potential monitored using a combination pH electrode.
5. The syringe tip is ejected at the tip eject station and a second tip is installed from the tip rack.
6. Standard solution is aliquoted from the standard solution tray (only one vial of solution in this tray for this procedure) and added to the sample solution on the stirrer.
7. A second potential reading is taken.
8. The syringe tip is ejected at the Tip Ejection Station.
9. After the measurement is complete the sample cell solution is slurped out using a vacuum pump coupled through a solenoid flush valve.

Preliminary results indicate precision comparable to that obtained manually (±3%). Time required per sample determination is approximately 5 minutes, excluding bench setup time. While this time is not substantially improved over that required by an analyst, radiation exposure is decreased.

No unusual modifications to the basic robot equipment were necessary.

The standard addition method can also be used in conjunction with specific ion electrodes, specifically, chloride and flouride electrodes. Robot bench and Commodore setup would be the same, except a halide standard would be used for the standard addition.

Gamma Tube Preparation

Many radiochemical samples analyzed at SRL require determition of the gamma activity. This is done by diluting the sample down to an optimal range for counting. Use of the Zymate system to automate this process frees technicians from a routine task and minimizes radiation exposure. The method is primarily a sample dilution and direct application to the robot is straightforward. Only the robot and the Master Laboratory Station are used for this application (Figure 5). The sequence of operation is as follows (Figure 6):

1. The Zymate robot uses the syringe hand to withdraw a sample aliquot from a vial in the sample tray and dispense it into an

empty 1-dram vial located in the gamma vial rack. The same procedure for getting a disposable syringe tip and disposing of it is used as in the Free Acid Determination Method.

2. The Zymate then gets the general purpose hand (gripper hand) and uses the remote MLS dispenser tip to dispense diluent into the gamma vial.
3. The Zymate system then transports the vial to the capper using the gripper hand. The bottle capper then attaches the screw cap to the vial.

After this process is completed the capped vials are placed in a secondary container and analyzed using pulse height analysis.

The robot requires about 1 minute per sample, excluding bench setup time.

This method has been mocked up with the exception of the capper (delivery pending). This is a different capper than that used in the dilution vial filling application since this is a low throughput application. This capper will be a commercially available air cylinder actuated screw capper that requires the caps to be placed on the vial prior to capping. The caps will be loaded in cap magazines so that the robot can pick up a cap and place it on the vial to be capped. The cap magazines and a pneumatic vial clamp will be modifications to the commercial capper.

Alpha Plate Preparation

One of the highest volume analytical methods at SRL is mounting samples for alpha activity counting. The alpha counting

is already automated but the procedure for fixing the sample to these plates is not. Along with the appropriate parts presenters, the Zymate system is used to automate this procedure (Figure 7).

Special design items required in this procedure are magazine dispensers for the alpha plates and planchets, drying rack with a disposable top, special tweezer hand using the Zymate general purpose hand, and infrared light shuttle mechanism. The magazine dispensers for the alpha plates (.020 thk. stainless steel 1.5 inch-dia discs) and the planchets (retangular molded plastic with a circular nest for the alpha plate) are operated by the robot by pushing a plunger in and out thus dispensing a plate or planchet. Each dispenser has a capacity to process about 40 samples before manual refilling is required. An air cylinder is used to shuttle the infrared lamp to a position over the drying rack. This is controlled via the Power and Event Controller. The sequence of operation for this procedure is as follows (Figure 8):

1. The Zymate robot gets the tweezer hand and uses this to get a plate from the plate dispenser.
2. The plate is put on the drying rack. This is repeated until 8 plates are on the rack.
3. The Zymate then gets the syringe hand (previously loaded with the sample) and aliquots a fixed sample onto the center each of the plates.
4. The IR lamp is then shuttled directly over the drying rack and the samples are dried for approximately 15 minutes.

5. At this point the plates would be moved one at a time to the flame station where they would be flamed at about 1000°C to fix the sample to the plate. This may be done manually or with the robot tweezer hand.
6. The robot then gets a planchet from the planchet dispenser and puts the plate in the planchet. This is repeated for all 8 plates.

Typical precision for this method is 2 to 3%. Although no significant time savings is expected from automating this procedure, reduction in exposure will be seen.

The above applications are either complete or nearing completion. Applications that are currently being investigated for robot automation are discussed below.

Plutonium TTA

In ths method, plutonium must be extracted away from other alpha emitters so that sample aliquots can be mounted on the same plates as discussed in the alpha plate mounting application. After adjustment of the plutonium to the +4 valence state, thenoyltrifluoroacetone (TTA) is used to extract plutonium out of the aqueous phase. Aliquots of the organic phase containing plutonium are mounted on the plates, dried with a special block heater, and handled just as in the alpha mounting procedure. Robot modules that will be used include the MLS, vortex stirrer, and the syringe and tweezer hand.

Special equipment will include a cold spot heater, bottle capper, vortex stirrer cover, and all equipment as in the alpha mounting procedure except the IR lamp. Critical steps to fully automating this procedure include use of the vortex stirrer to perform extractions and the use of the MLS to efficiently separate the organic and aqueous phases.

This method will offer substantial reduction in radiation exposure. Robot sample preparation time is expected to be about 30 minutes, similar to that required by a technician. Precision of this method is about 3%.

pH Titration

Titration to a pH endpoint is a common laboratory procedure. In our laboratory, pH titration is used to determine aluminate, hydroxide, and carbonate concentrations in waste tank solutions. Three sequential pH titrations are performed. A combination pH electrode monitors the solution potential and the titration is ended at a pH of 7 ± 1 (to the nearest 0.001 ml). This procedure can be automated by using the MLS and remote dispenser to add acid to a basic solution. It is likely that we will combine the robot system with commercial autotitration systems that already have optimized the analyses operations and endpoint detection calculations. The robot will handle sample preparation prior to presentation to the autoanalyzer.

Pipette Calibration

Pipetman pipettes (Rainin Instrument Co.) are frequently used throughout SRL/SRP in the laboratory. These pipettes range from

2 to 1000 µl and can be calibrated by adjusting a rotating sleeve that varies pipette displaced volume. Calibration is done gravimetrically using distilled water and an analytical balance. This procedure is repetitive, monotonous, and time consuming. Using the Zymate system will involve designing a pipette hand for gripping and operating the pipette plunger, a pipette rack, and a pipette adjusting station for turning the keyed sleeve.

ROBOTICS APPLICATION PROBLEMS

Most of the advantages of using robotics were outlined in the above justification and application discussion. However, implementation problems are apparent in our applications and can be categorized as:

- Procedure integration problems
- Fixturing problems
- Required associated equipment
- Programming

Integrating into the existing procedures often requires the procedure to be changed somewhat. For example vial filling required that the vial type be standardized for ease of automation. Another example is that safety requirements prohibit unattended open flames so the flaming of alpha plates must be done manually or by the robot under direct observation. Also methods may be slightly altered to minimize robot hand changing or to eliminate a complex movement that would be difficult for the robot.

Fixturing problems arise since the Zymate (or other existing small robot systems) do not normally incorporate any visual sensing. Therefore every station or sample must be precisely fixtured for the robot. Provisions must be made if sample trays are to be conveniently moved from the workcell. Position calibration must be routinely checked to ensure no shifting of stations or drift in robot position encoders. While we are involved in using vision with larger robots and for parts inspection, we have not incorporated any vision with our laboratory robots. Future development will be done in this area.

In order to completely implement any of the above applications, auxiliary equipment had to be integrated with the Zymate system. Vial capping and parts feeding are the major types of associated equipment we have encountered. For low throughput applications (<100 samples/shift), manually loaded magazines for caps, plates, etc. are the most effective way of presenting parts for the robot. For higher throughput applications, such as the dilution vial filling application, automatic parts orienters and feeders such as vibratory bowl feeders are preferable. Commercial feeders are available that can be customized to handle feeding small parts.

Programming the Zymate is extremely easy for the novice computer user. Every module is menu driven and the language is structured much as a list language (e.g. FORTH). While this is good from the point of ease of use, the experienced programmer does

not have the capability to easily alter systems software (all system software done in PLM/86 and assembler code and is in PROM). Therefore interfacing a device to act as a system module is prohibitive. All of our interfacing has been done via the Power and Event Controller so no systems software modifications were necessary. However, the ability to add custom modules to this system would be a significant enhancement. The calculation ability of the Zymate system is also limited. We are avoiding this problem by using an additional supervisory computer (e.g. Commodore 4032 used in free acid determination) to perform calculations and also to link the Zymate to other instruments.

COST ANALYSIS

Cost analyses of robotic systems are widely available in published literature[2] and the details will not be covered here. However, in most manufacturing processes the most useful cost analysis involves calculating the payback period or return on investment (ROI) for the application. When examining factors that enter these calculations it is evident that significant terms can only be estimated and some savings (i.e. reduced radiation exposure) can not be assigned a dollar amount. With this in mind a payback cost analysis is presented here for the dilution vial filling application described above.

The basic payback equation is:

$$P=E/S$$

where

P= payback in years

E= total expenditures

S= yearly savings

This can be further expanded as

$$P= C/(WS+RS+AS+DE(R)-RM-RO)$$

where

C= total initial cost (robot, installation, special equipment)

WS= wages and benefits

RS= yearly robot savings (material, increased quality, reduced exposure, etc.)

AS= yearly savings (operating and maintenance)

DE= robot depreciation

R= tax rate

RM= yearly robot maintenance

RO= operating and programming cost

Using the above equation conservative factors for the dilution vial filling application are (1 shift/day operation):

C= 90,000

(robot, capper, balance, trays= 60,000; installation = 30,000)

WS= 35,000 (includes 40% worker benefits)

RS= 0 (assume equal quality work)

AS= 0

DE= 5000 (yearly rate for 7 year straight line method)

R= 50% (corporate rate)

RM= 1400 (assume 4% of robot cost per year)

RO= 7000 (assume 20% worker time per year for operation and additional programming)

Therefore,

P = 3.1 years

CONCLUSION

Initial work at SRL/SRP has indicated that robotics is feasible and justifiable in many of our standard chemical sample handling procedures. The ease of use of the Zymate system in particular has been an effective and efficient method to implement a variety of chemical procedures. We have demonstrated four standard sample preparation procedures and have immediate plans to implement three more. There are many other applications that lend themselves to automation and will be investigated in the near future.

BIBLOGRAPHY

1. G. L. Hawk, J. N. Little, F. H. Zenie, "A Robotic Approach to Automated Sample Preparation," American Laboratory, June 1982.

2. J. G. Holmes, "Justifying a Robot Machining System in Batch Manufacturing," Robotics Today, Summer 1979.

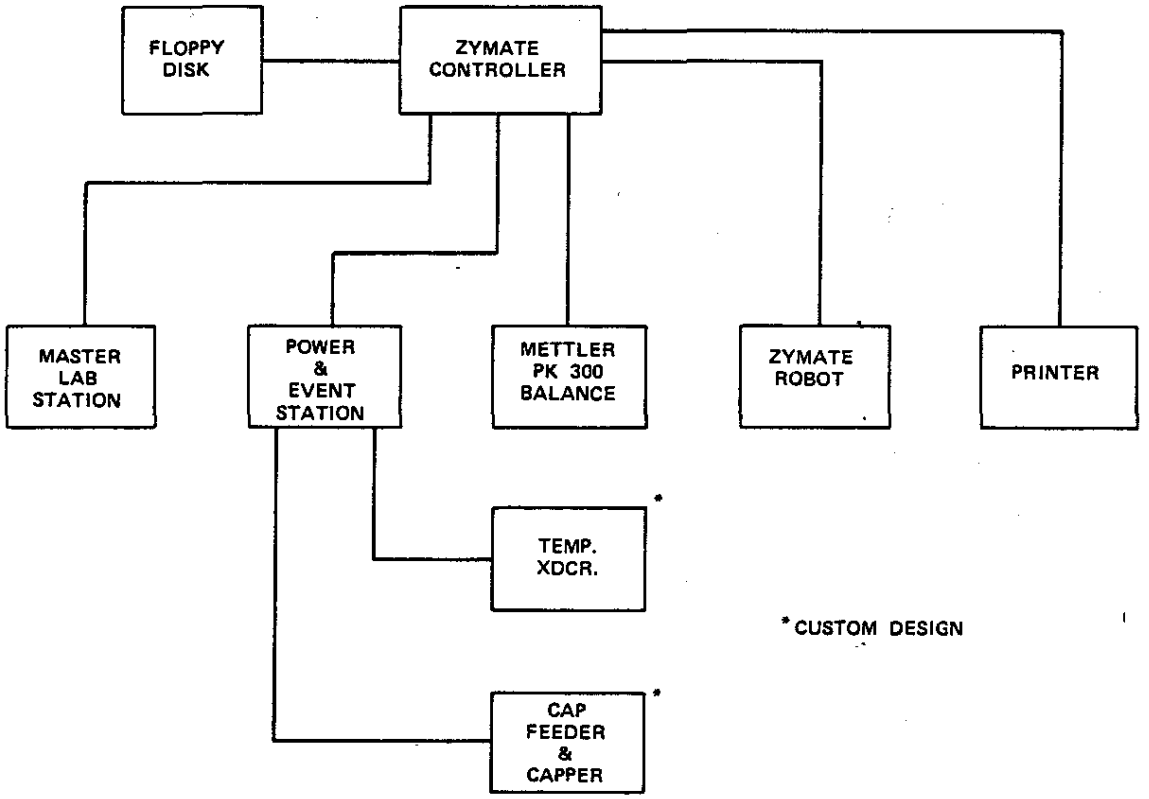

FIGURE 1. Dilution Vial Filling System Diagram

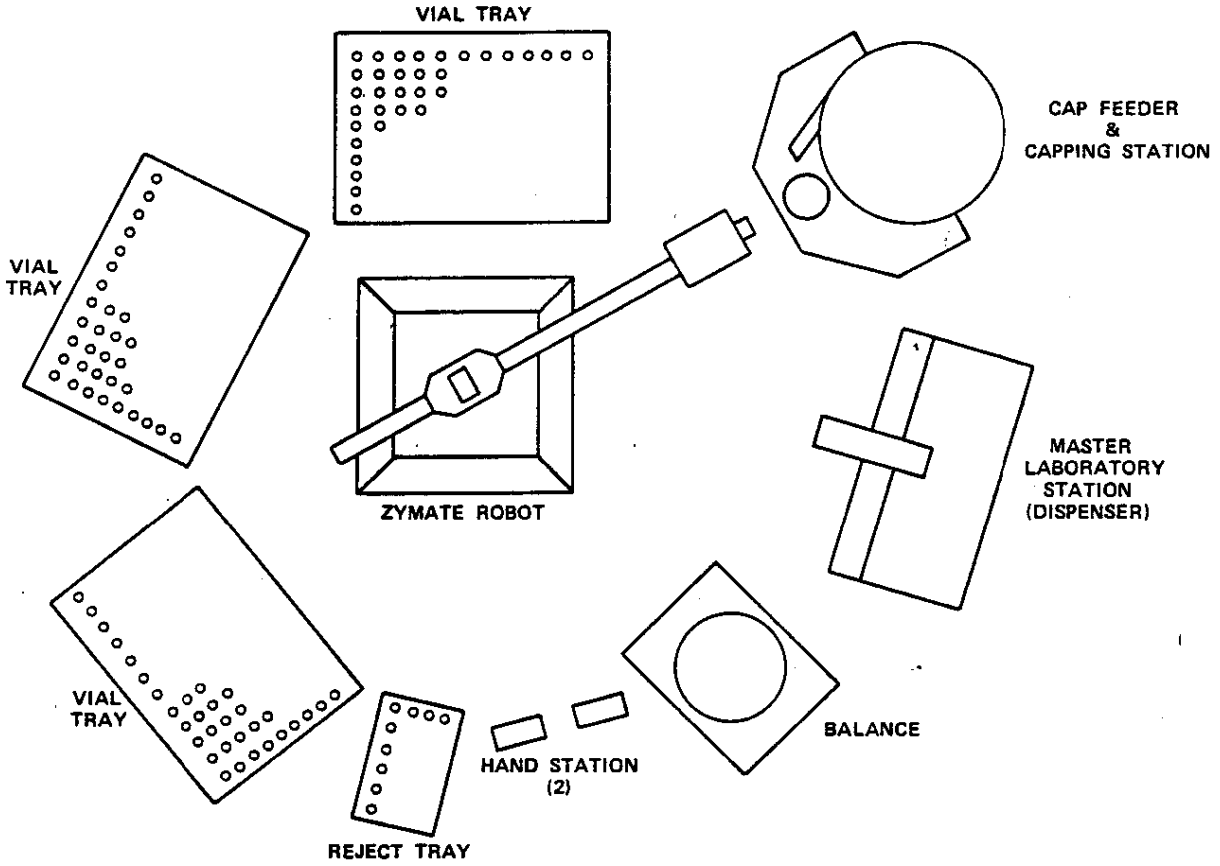

FIGURE 2. Dilution Vial Filling Layout

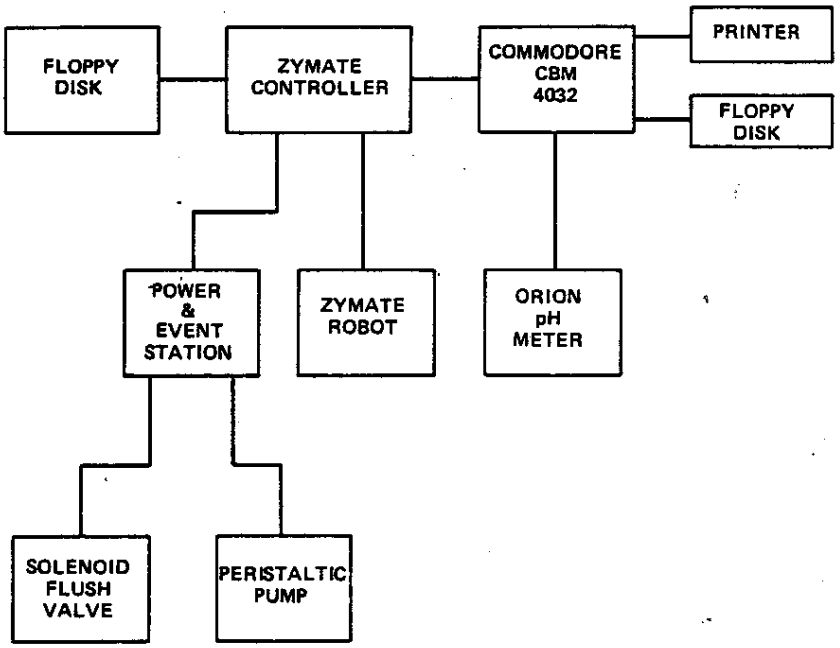

FIGURE 3., Free Acid Determination System Diagram

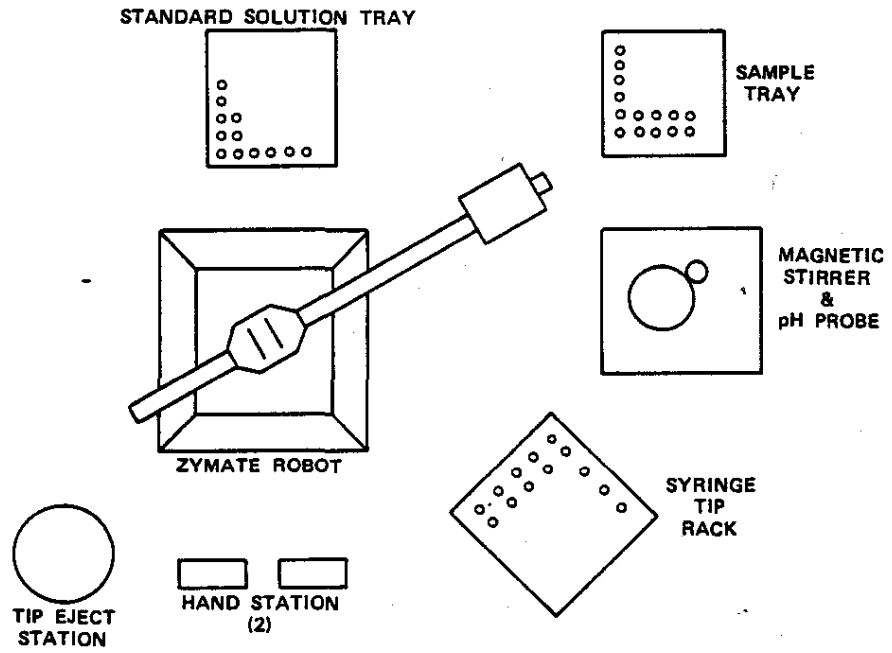

FIGURE 4. Free Acid Determination Layout

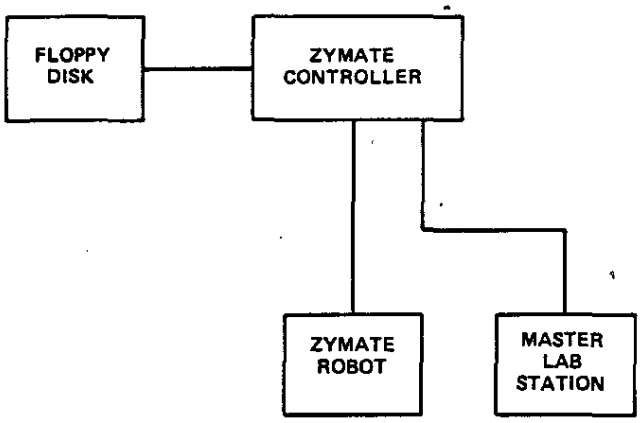

FIGURE 5. Gamma Tube Preparation System Diagram

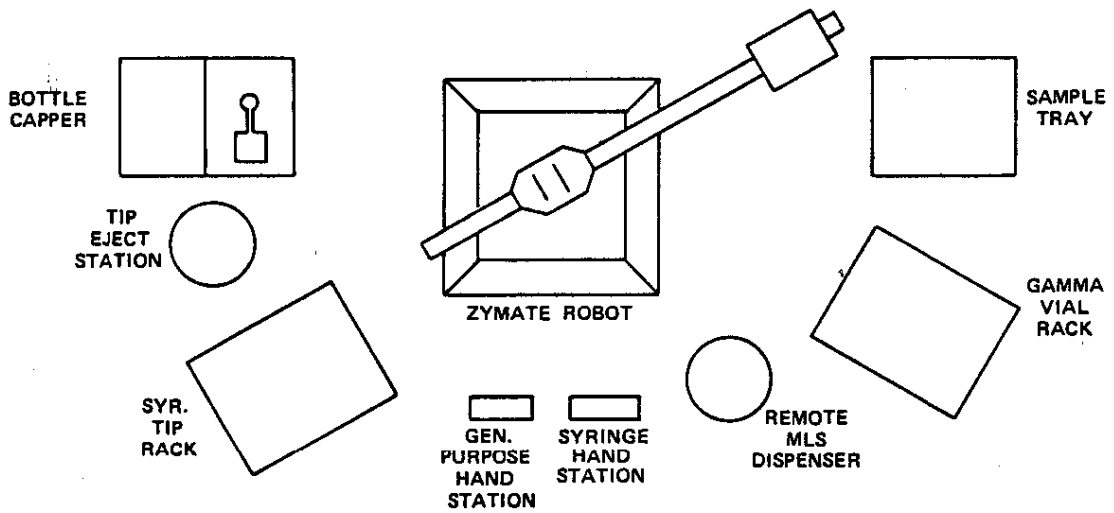

FIGURE 6. Gamma Tube Preparation Layout

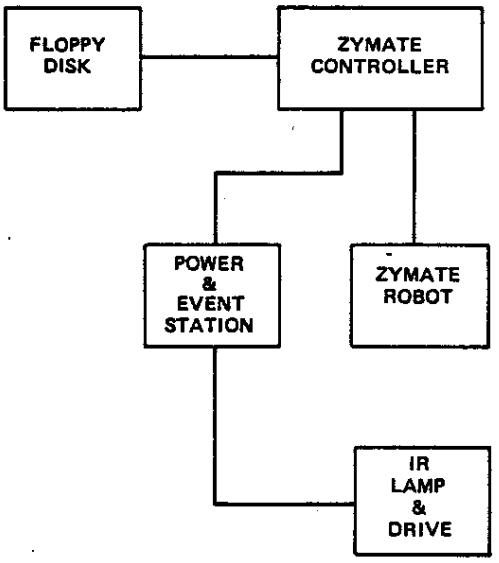

FIGURE 7. Alpha Plate Preparation System Diagram

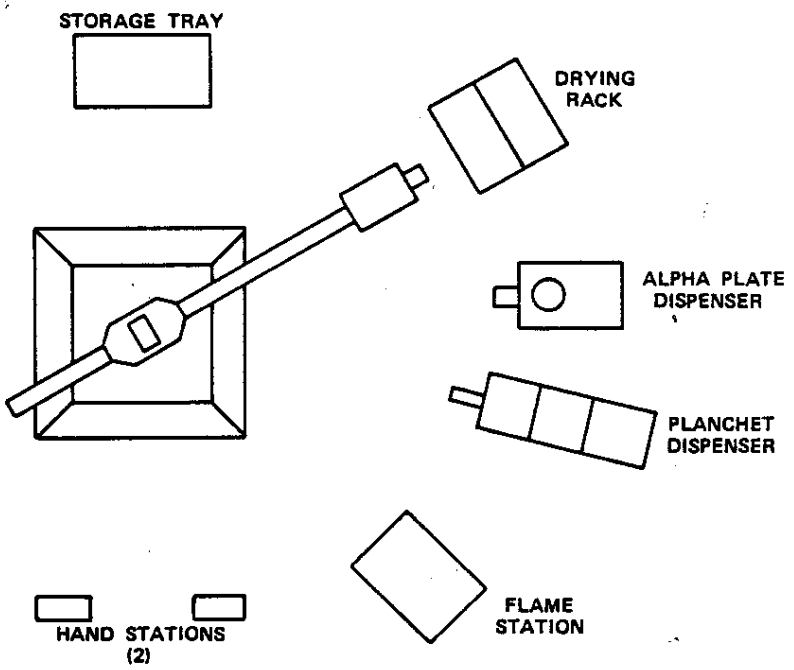

FIGURE 8. Alpha Plate Preparation Layout