RECORDS ADMINISTRATION
ABZE

ACC # 727424

DP-MS-81-74

DEVELOPMENT AND TESTING OF PROTOTYPE ALPHA WASTE INCINERATOR OFF-GAS SYSTEMS

by

Eric J. Freed and George W. Becker

E. I. du Pont de Nemours & Co.
Savannah River Laboratory
Aiken, South Carolina 29808

Proposed for Publication and Presentation
ANS Topical Meeting on Treatment and Handling of Radioactive Waste
Richland, WA
April 19-22, 1982

This paper was prepared in connection with work done under Contract No. DE-AC09-76SR00001 with the U.S. Department of Energy. By acceptance of this paper, the publisher and/or recipient acknowledges the U.S. Government's right to retain a nonexclusive, royalty-free license in and to any copyright covering this paper, along with the right to reproduce and to authorize others to reproduce all or part of the copyrighted paper.

DEVELOPMENT AND TESTING OF PROTOTYPE ALPHA WASTE INCINERATOR OFF-GAS SYSTEMS*

Eric J. Freed and George W. Becker

E. I. du Pont de Nemours & Co.
Savannah River Laboratory
Aiken, South Carolina 29808

A test program is in progress at Savannah River Laboratory (SRL) to confirm and develop incinerator design technology for an SRP production Alpha Waste Incinerator (AWI) to be built in the mid-1980s. The Incinerator Components Test Facility (ICTF) is a full-scale (5 kg/hr), electrically heated, controlled-air prototype incinerator built to burn nonradioactive solid waste. The incinerator has been operating successfully at SRL since March 1979 and has met or exceeded all design criteria. During the first 1-1/2 years of operation, liquid scrubbers were used to remove particulates and hydrochloric acid from the incinerator exhaust gases. A dry off-gas system is currently being tested to provide data to Savannah River Plant's proposed AWI.

INTRODUCTION

The Savannah River Plant (SRP) near Aiken, South Carolina, has been operating since 1953 to produce special nuclear materials, primarily plutonium and tritium, for defense purposes. This type of operation necessarily produces two forms of radioactive waste: high-level radioactive liquid waste stored in large underground tanks, and solid radioactive waste stored in the SRP Burial Ground Facility. The solid waste is separated as to whether it is contaminated primarily with beta-gamma-emitting radionuclides or with alpha-emitting radionuclides.

At present, SRP has approximately 3000 M^3 of solid TRU waste (not including concrete pours) containing 420,000 Ci in retrievable storage at the Burial Ground Facility. More than half of this waste is classified as combustible. The annual combustible TRU waste generation rate is about 300 M^3, containing 25,000 Ci. This paper is concerned with the process of treating solid, combustible transuranic (TRU) wastes.

* The information contained in this article was developed during the course of work under Contract No. DE-AC09-76SR00001 with the U.S. Department of Energy.

OFF-GAS TREATMENT TESTING

Two different off-gas systems have been tested for particulate carryover, decontamination factors (DF's), and overall operation performance.

WET OFF-GAS SYSTEM

The wet off-gas treatment system consists of three independent liquid scrubber systems; a venturi quench, a fibrous bed scrubber, and a packed-bed neutralization column (Figure 1).

The venturi quench scrubber employs a jet venturi constructed of Inconel® (Huntington Alloys, Inc.) 625 and a fiberglass reinforced polyester separation tank with a capacity of 230 liters.

The cooling solution, shown in Figure 1, reduces the temperature of the off-gases from 900°C to 70°C. The solution becomes saturated with HCl (24 wt %) and is recirculated at a continuous rate of 75 liters per minute with a 207 kPa pump. A 53 kw chiller provides for heat removal of the acid solution after it leaves the quencher. Particulate is removed from the liquid recycle loop by a replaceable in-line fitler.

After the gases are cooled, they enter the fibrous-bed scrubber, where further off-gas particulate removal occurs. A high-pressure aqueous spray, saturated in HCl, captures the particulate, which then becomes entrained in the scrub solution. This liquid is pumped through a replaceable in-line filter to the solids from the acid solution. Two pumps recirculate the scrub solution from a 380-liter tank for this closed-loop liquid system: a low-pressure header pump and a high-pressure spray pump.

The neutralizing scrubber is the third and last of the scrub systems. It consists of a single recirculating system of basic solution to neutralize the HCl in the off-gas. A 275 kPa pump supplies approximately 60 liters per minute of neutralizing scrub solution to an overhead spray which countercurrently strips the chlorides from the off-gases in the packed column. A mist eliminator is incorporated in the top of the column to de-entrain small water droplets from the gas stream.

The purpose of three independent scrubber loops is to minimize the volume of transuranic contaminated salt from the evaporation of the scrubber solutions. Most of the contaminated particulate is captured in the first two scrubbers; hence, the salt-producing neutralizing scrubber is placed last in the scrubbing sequence.

Final filtration is accomplished by passing the gases through parallel high-efficiency particulate air (HEPA) filters before release.

PARTICULATE CARRYOVER

The particulate carryover for the incinerator was less than 0.04% of the feed material. Amounts of particulates from the incinerator increased significantly when the incinerator was fed beyond the stoichiometric air demand. Under normal operation with substoichiometric primary chamber airflow, 30% of the particulates were less than one micron in diameter for the standard feed mixture.

Particulate in the acid scrubber consisted of carbon and metals such as Fe, Zn, Cu, Ca, Na, Cd, Cr, Ni, and Pb. The metals were transported to the liquid scrubber as volatile oxides and chlorides. Particulate loading of the 10 micron polyethylene scrub solution filters were $2(10^{-4})$ gram/gram waste feed in the first venturi quench loop and $1.3(10^{-4})$ gram/gram of waste feed in the Mystaire® (Heat Systems Ultrasonics, Inc.) scrubber loop. Particulate loading of the HEPA filter following the three aqueous scrubbers was negligible.

DECONTAMINATION FACTOR

Dysprosium oxide was selected for the DF tests as the spike material because it is nonradioactive, has similar physical properties to plutonium (the element of chief interest in a TRU waste incinerator) and because it can be readily analyzed at very low concentrations by neutron activation analysis. Although no other element will react identically to Pu, it was felt that Dy would adequately simulate Pu in the incinerator.

Feed material of the following composition was fed to the incinerator:

31% Cellulose
21% Polyethylene
27% Polyvinylchloride
0.084% Dy (first 4 runs)
0.118% Dy (last 13 runs)

The incinerator feed rate averaged 4.6 kg/hr and the ash averaged 0.18 kg/hr (4% ash). Carbon in the ash averaged 3.7 wt %.

Most of the dysprosium in the off-gas system was found in the venturi quench solution. No data are reported for the Mystaire® scrubber because pump outages and system leaks prevented its operation after the fourth run. Losses of dysprosium due to these leaks was minor based on estimated volumes and analyses of the leaked solution.

Data show an overall carryover factor for the incinerator of 0.26% with 95% of the carried-over dyprosium ending up in the venturi quench. An overall DF for the system was found to be 1.5 (10^4), excluding HEPA filtration.

OPERATION PERFORMANCE

The wet system operated satisfactorily, but was prone to leaks within the closed loop processes of the venturi quench and Mystaire® scrubbers due to corrosion of metal pipe fittings. PVC fittings were used where possible in each line to reduce the acidic corrosion. The Mystaire® scrubber's high-pressure pump was plagued with pluggage from dirt particles and airlocks, and was eventually taken out of service. The neutralizing packed column operated trouble-free.

DRY OFF-GAS SYSTEM

The dry off-gas treatment system is a two-stage filtration process (Figure 2). Hot gases from the incinerator afterburner are immediately cooled from approximately 900° to 160°C in a modified venturi water mist cooler. At this exit temperature, the water vapor remains in the vapor phase, and the metal salts condense into the solid phase. This cooled gas is then introduced into the first stage of filtration: the sintered metal roughing filters (SMF). Sixty nickel filters, 33 cm in length and 5 cm in diameter, compile 3.2 m^2 of surface area. These filters are rated 98% efficient in the 1 to 3 micron range. The particulate in the off-gases impinge on the outside of these cylindrical filters to form a filter cake. To remove this filter cake, high-pressure air is forced through the filters in the reverse direction for several seconds, blowing the cake away from the nickel surface and causing it to fall into the hopper below for occasional removal. Thus, the first stage is a renewable filtration medium. The cleansed gases are drawn from the SMF hopper into the second stage of filtration: a high temperature HEPA filter. HEPA filters are not renewable and must be replaced upon plugging. Therefore, a renewable medium is necessary to substantially lower the particulate loading on the absolute filtration of the HEPA filter. SMF's will extend the life of a HEPA filter from hours to months. No filtration takes place beyond this point; but, because of the incineration of chlorinated hydrocarbons, the carbon steel building ventilation stack in which the off-gases are vented must be protected. This is accomplished by a gas-liquid neutralization packed column, placed after the high temperature HEPA filter.

PARTICULATE CARRYOVER AND DF

Particulate carryover and DF tests have not been conducted as of this writing because of delays caused by the replacement of the primary and secondary heaters. DF's across sintered metal filters have been previously calculated as high as 10′. Approximately 1225 kg of material was burned during the dry off-gas tests. No particulate loading was observed on the hi-temperature HEPA filter, and the pressure drop across the HEPA filter stayed constant throughout the entire testing period. This indicates that the SMF's operated efficiently in the same filtration range as the HEPA filter. Dysprosium oxide and cerium oxide tracing tests will be conducted to obtain actual DF's across the dry off-gas system and will be reported upon completion.

OVERALL OPERATION

Initial tests of the key component to the dry system, the sintered nickel filters, were hampered by rapid filter blinding.

Polyvinylchloride shoe covers were identified as the ingredient of the feed material which caused the blinding. Tar or oil from incomplete combustion was suspected as the substance in the off-gas causing the blinding. However, the problem was not eliminated by varying two operating conditions, both of which were designed to improve combustion: a) increasing the operating temperature of the secondary chamber from about 900° to 1000°C, or b) by adjusting primary chamber airflow to establish a flame at the entrance to the secondary chamber. Precoating of the sintered nickel filters with a fine powder did reduce the blinding problem. The precoat serves as a disposal filter media which is subject to removal by back-blowing with compressed air. Precoating of filters is successfully used in many industries. Tests with hydrated lime precoat showed the effectiveness of precoating in managing the blinding problem but the lime changed from a fluffy powder to a brittle crust which was difficult to remove. The crusting was presumably the result of chemical reaction between the lime and hydrogen chloride in the gas stream (forming hygroscopic calcium chloride). Silica #111 powder is presently being tested as a precoat material. Because of its relatively inert properties, silica remains in a powdered form and thus is conducive to removal by blowback. These tests showed that the filter pluggage problem was caused by a surface blinding phenomenon and that the precoat alone acted as the filter medium. Therefore, a program was set up to test a process which renews the filtration medium, when necessary, by applying additional layers of precoat material over the particulate-laden filter surface. This extended the run time between blowbacks, and also increased the cake thickness which improved the efficiency of cake removal.

A silica powder layer thickness of 0.05 cm was initially used to precoat the filters. Additional 0.05 cm layers of silica were applied

in a semi-continuous fashion: one layer after each specific period of operation (initially 10 hours). When the filter pressure drop approaches an unacceptable level, chosen as 7.5 kPa in this system due to exhaust blower limitations, the filters are blownback with a reverse flow of 400 kPa air to remove the silica and collected particulate. Thus far, blowback data of the pressure drop across the SMF's indicates that steady-state operation of the blowback - coating cycle can be achieved.

Optimization tests have been conducted on the coating thickness and duration time between coats. (See Figure 3.) From this graph it can be seen that a reduction in coating thickness had no adverse effect on the operation, and the only real increases in pressure drop occurred during the coating procedure, as would be expected. Maximum duration time between coats was also tested by extending a run until the filters began to plug. This time was approximately 60 hours. Therefore, optimization improved the time duration between blowbacks from 40 hours initially to 480 hours.

Silica, for use as a coating material, is also advantageous since it is a main component of borosilicate glass and is compatible with both alternative glass encapsulation processes. Since ash and SMF waste are powders with essentially no chlorides, transfer of these materials to the SRP HLW system (double contained carbon steel waste tanks) and ultimately to the DWPF is possible. Direct encapsulation of ash and SMF waste in a dedicated melter coupled to the proposed alpha waste incinerator is also feasible.

CONCLUSIONS

In conclusion, both off-gas systems were found effective in removing entrained particulate. The dry off-gas system proved to be more efficient and advantageous. A precoat is required for successful metal sintered filter operation and silica powder is preferred because it is chemically inert and compatible with the SRP HLW system and glass making. Comparison of the two off-gas system flowsheets (Figures 1 and 2) shows some of the obvious advantages of the dry system: a reduction in the number of process steps (nearly in half) which simplifies the operation, saving in equipment costs over the wet system; a reduction in secondary waste volumes; elimination of acidic recycle loops; and compatibility of the final waste forms with the HLW system.

FUTURE PROGRAM

Two alternate methods for disposal of both incinerator ash and particulate collected by the sintered metal filters are being considered. In both cases ash would be encapsulated in glass to produce a waste form that will meet all anticipated permanent disposal

criteria. One alternative is direct disposal in the SRP high-level waste tanks to be ultimately encapsulated in glass in the SRP Defense Waste Processing Facility, to be operational in the late 1980's. The other alternative is to install a dedicated melter at the proposed Alpha Waste Incinerator facility.

A program is under way to install a 160 cm^2 joule-heated melter in the place of the primary chamber to test ash encapsulation and direct combustion and encapsulation of the combustible waste and its effects on the dry off-gas system. A hot demonstration of incineration/melting is planned for the mid-1980's at SRL in support of the plant AWI scheduled for authorization in fiscal year 1984.

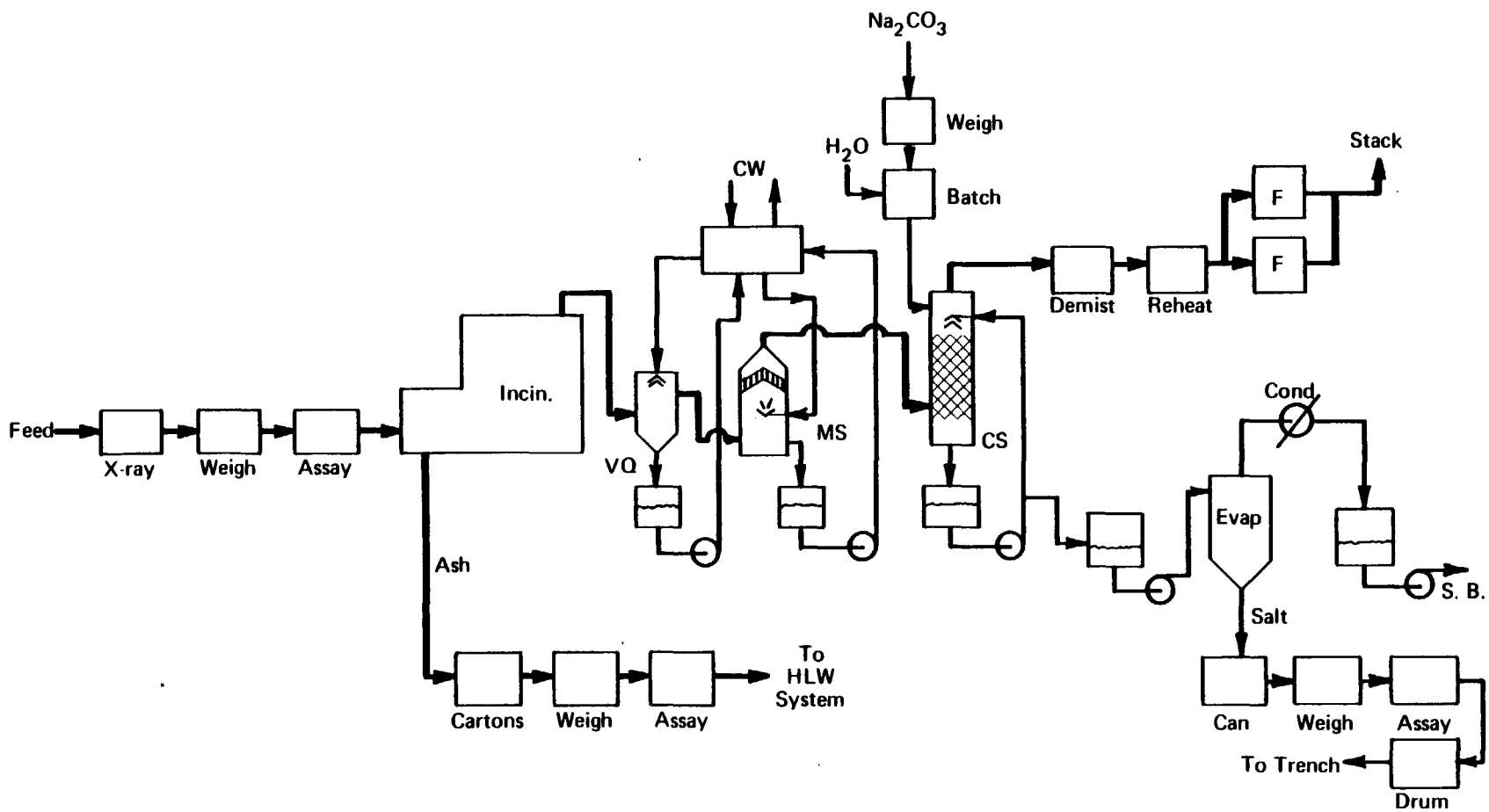

FIGURE 1. Wet Off-Gas System

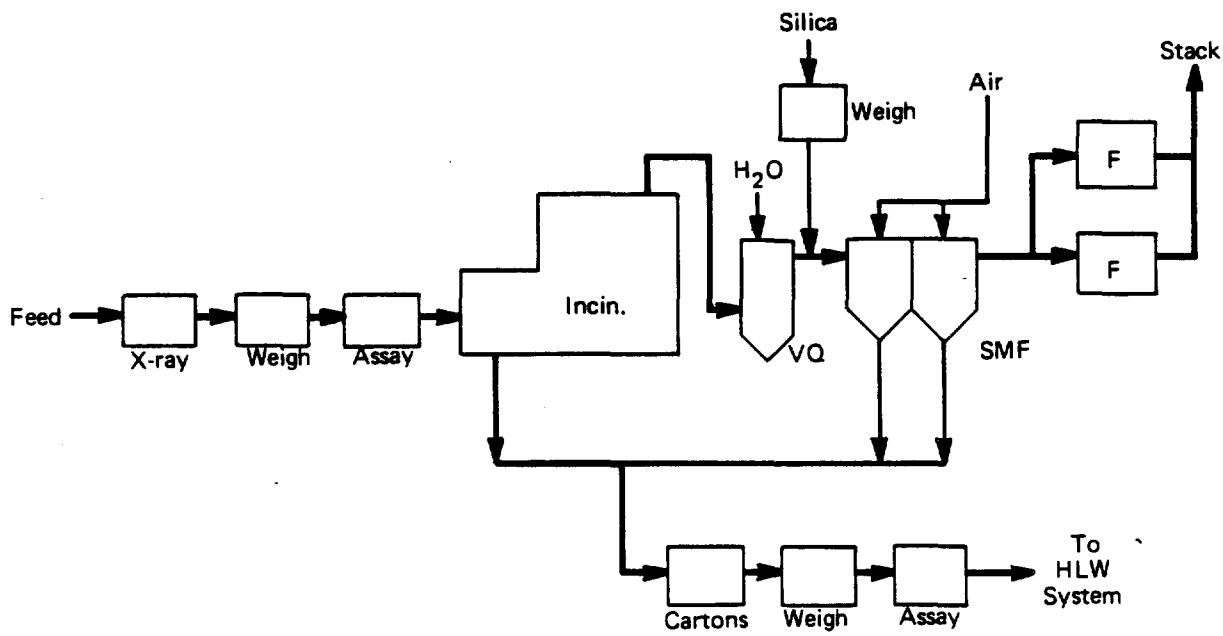

FIGURE 2. Dry Off-Gas System

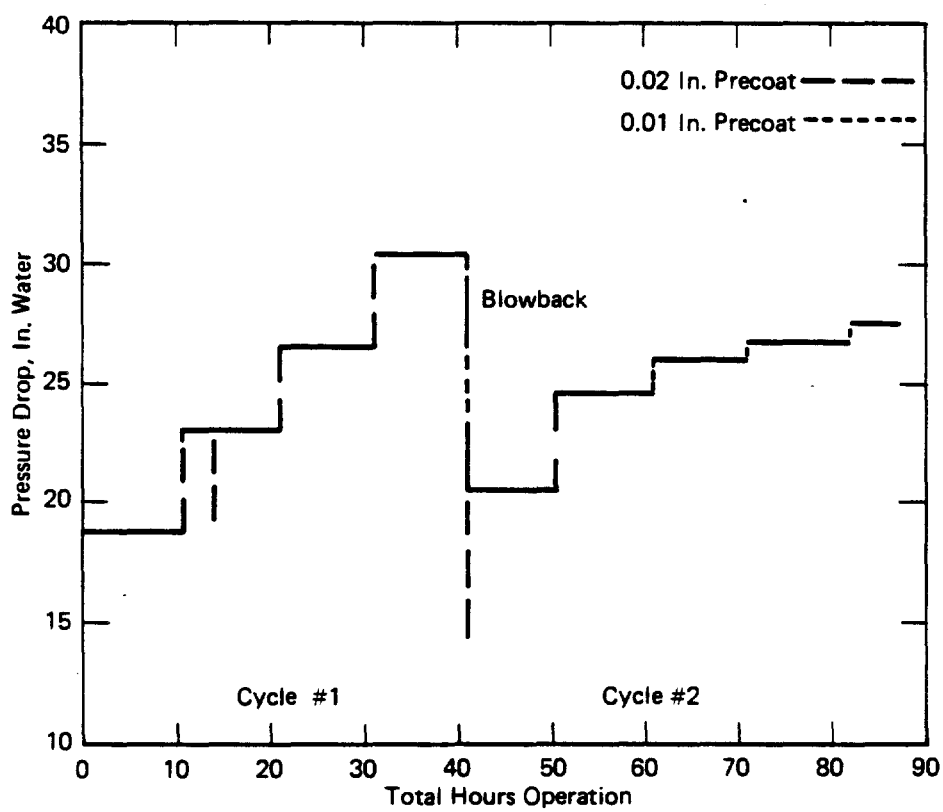

FIGURE 3. ICTF Semi-Continuous Silica Precoat Operation of SMF