TIS

RECORDS ADMINISTRATION
AGTK

CC: D. M. Peek, DOE-SR
R. E. Naylor, Wilm.
C. H. Ice, SRL
D. L. McIntosh
M. L. Hyder
TIS

October 11, 1978

TO DISTRIBUTION

Attached is a copy of the following:
DP-MS-78-61, "Chemical Aspects of Alternate Fuel Cycles," by M. L. Hyder.

This paper will be presented at the American Nuclear Society Meeting to be held in Washington, DC on November 12-17, 1978. An abstract was released in July 1978.

If there are comments about its release notify the TIS office (Ext. 3598).

For any technical clarification, we suggest you call:

M. L. Hyder, Research Manager
Separations Chemistry Division
Savannah River Laboratory

DP-MS-78-61

ACC# 735045

SRL
RECORD COPY

# CHEMICAL ASPECTS OF ALTERNATE FUEL CYCLES

by

M. L. Hyder

E. I. du Pont de Nemours and Company
Savannah River Laboratory
Aiken, South Carolina 29801

A paper for presentation at the ANS Meeting
Washington, DC
November 12-17, 1978

---

This paper was prepared in connection with work under Contract No. AT(07-2)-1 with the U.S. Department of Energy. By acceptance of this paper, the publisher and/or recipient acknowledges the U.S. Government's right to retain a nonexclusive, royalty-free license in and to any copyright covering this paper, along with the right to reproduce and to authorize others to reproduce all or part of the copyrighted paper.

# CHEMICAL ASPECTS OF ALTERNATE FUEL CYCLES*

by

M. L. Hyder

E. I. du Pont de Nemours and Company
Savannah River Laboratory
Aiken, South Carolina 29801

## CHEMICAL ASPECTS OF ALTERNATE FUEL CYCLES

Alternatives to the partially realized conventional uranium-plutonium nuclear fuel cycle are being considered primarily because of concern about the potential of diversion of plutonium to illicit uses. Some of these alternatives raise major technical difficulties in engineering, physics, chemistry, and facility design. The chemical difficulties are the subject of this talk.

The alternatives are of two sorts. The first alternative class is the "technical fixes" to the plutonium diversion problem that make the plutonium more difficult to remove from the fuel cycle. The second is the use of thorium in nuclear fuels so that plutonium is largely replaced by $^{233}U$. Although the latter isotope is itself attractive for diversion, it can be rendered

*The information contained in this article was developed during the course of work under Contract No. AT(07-2)-1 with the U.S. Department of Energy.

unattractive by dilution with nonfissile $^{238}U$. In principle, the $^{233}U$-thorium system can even be the basis of a breeder cycle, although the neutron yield of $^{233}U$ is less than that of plutonium.

Methods proposed to make the uranium-plutonium system more resistant to diversion and still maintain the efficient recovery and use of the fissile material from spent fuel will be discussed. These methods generally involve the dilution or adulteration of the plutonium with a material that makes it less attractive for nonreactor applications but has only a small effect on its usefulness as a reactor fuel.

The simplest method is termed "coprocessing." In this concept, the plutonium stream obtained in reprocessing is made to contain a portion of the uranium stream; therefore, in the eventual conversion of the plutonium to oxide for fuel fabrication, it is greatly diluted by uranium oxide. The advantage of this method is that the bulk of material that has to be diverted to obtain a given quantity of plutonium is greatly increased, and a chemical separation of plutonium from uranium is necessary to obtain a fissile material with potential for fabrication into a weapon. The mixing of the uranium with the plutonium has no serious disadvantages for fabricating recycle fuel since the plutonium would be blended with a much larger quantity of uranium for this purpose in any event.

One chemical process for accomplishing coprocessing without ever separating plutonium from uranium is outlined in the following slides. Slide 1 shows a conventional Purex schematic reprocessing flowsheet. In the first cycle of solvent extraction, uranium and plutonium are extracted from fission products by a hydrocarbon solution of tributylphosphate (TBP). Separation of uranium and plutonium from one another is then accomplished in a second contactor where the plutonium is reduced by a suitable reagent (such as hydroxylamine or ferrous sulfamate) to the trivalent state. Plutonium in this state is poorly extracted by TBP and is rejected to the aqueous phase. Plutonium is thus separated from uranium, which is not reduced. The partitioning contactor is run in a manner that will give efficient separation of uranium and plutonium; the product streams are then subjected to additional purification.

Slide 2 shows the alteration of Purex for coprocessing. Although the distribution of uranium is heavily biased toward the organic phase, a small fraction is in equilibrium in the aqueous phase. Thus, by adding the uranium to the partitioning contactor at the end where the aqueous stream exists, some uranium must be carried with the plutonium. The basis for the flowsheet was developed by Thompson and Okamoto at the Savannah River Laboratory in Aiken, South Carolina. Their flowsheet

yields a mixed product stream containing between 5 and 25% of plutonium depending upon operating conditions and the specific design of the contactor. At the maximum rate or uranium loss to the 1BP stream, only about 10% of the total uranium is diverted; the remainder is processed and purified as before.

This idea of feeding the partitioning contactor at the aqueous exit is also used in a number of alternative flowsheets that have been proposed for coprocessing uranium and plutonium. These variants include such features as partial uranium recycle or electrolytic reduction. They may have an advantage for preparing a more concentrated system (∿30% plutonium in uranium) for fabricating fast breeder reactor (FBR) fuel, if this is desired. All variants have the advantage that plutonium is never entirely separated from the uranium: thus, a pure plutonium solution cannot be obtained by a technique such as continuous sampling.

The 1BP mixed actinide stream contains low levels of fission products. The stream requires additional purification for subsequent hands-on work in fuel fabrication. The additional purification can be done if the plutonium is reoxidized for a second extraction-purification cycle, but this offers an opportunity for separation of the two elements by fairly simple process adjustment. An alternative is to conduct all subsequent operations through fuel fabrication in a remotely operated shielded facility. The General Electric Company has developed a

solidification process called Coprecal that appears to be adaptable to remote operation and which does not separate uranium and plutonium. It is based upon the precipitation of these elements with ammonia and conversion of the precipitate to oxide in a heated fluidized bed (Slide 3). Alternative methods involving evaporation and thermal denitration of the mixed product solution may also be considered.

Dilution of plutonium through coprocessing is one fairly simple method of discouraging covert diversion of plutonium, but it offers no large barrier to its use as weapon material once this diversion is accomplished. Somewhat greater protection could be achieved by the next category of techniques, spiking. These techniques involve the addition of isotopes that either render plutonium containing material hazardous to unprotected personnel or make it unsuitable for weapon fabrication.

Slide 4 shows a variation of the Purex coprocessing process in which a highly radioactive radioisotope is added to the plutonium stream during its separation from the bulk of the uranium. A suitable isotope might be $^{60}Co$, which can be made in large quantities as a reactor by-product, or a fission product such as $^{95}Zr$. These radionuclides emit copious quantities of penetrating gamma radiation, and it is possible to put enough of either into the plutonium to render the material lethal to unprotected personnel without rendering it unsuitable for use as a fuel.

A price is paid for this type of protection. The gamma-emitting radioisotope tends to degrade materials used in handling it, renders maintenance of fuel fabrication equipment more difficult, greatly complicates radiometric assay, and generally increases radiation doses to operating personnel. Problems would arise in qualifying fuel made from it for reactor use. Presumably these problems could be tolerated if the incentives were great enough.

The principal chemical problems appear in the conversion operation in which the product solution is converted to oxide and in the preparation of the spike. A rare earth type spike is desirable, as it is consistent with the chemistry of the $UO_2$-$PuO_2$ and can follow the fuel through product fabrication without difficulty. However, the recovery of fission product rare earths in sufficient purity from high-level fission product waste solutions is difficult. Some rare earth fission products have large neutron absorption cross sections and are undesirable additives to fuel. Finally, the half-lives of the rare earth spikes are less than a year. The rare earths are practically eliminated by these factors, at least for aged fuel.

However, Poberskin of the Battelle (Columbus) Memorial Institute has proposed a coprocessing scheme in which the rare earths and the higher actinides (americium, curium, and californium) are returned to the fuel as spikes. The higher actinides accumulate in repeated recycle and become very effective spikes.

Reprocessing rather short-cooled fuel in this scheme and also gaining a partial separation of rare earths, to eliminate some of the neutron poisons, are still desirable. Rare earth recovery, partial separation, and purification would add very significantly to the cost of a reprocessing operation. To date, a detailed process has not been elaborated; but there should be no doubt of feasibility.

Recovering $^{95}Zr$ and its niobium daughter from the high-level waste stream and incorporating these into the fuel would be simpler. They are probably well suited to this purpose. However, these isotopes have a very short half-life and so are of value for a limited time.

The use of a low-decontamination flowsheet to leave a considerable amount of mixed fission product in the uranium-plutonium stream has been proposed as part of the "Civex" process. Low decontamination implies an inefficient separation of fission products, which can be achieved in several ways. From half-life considerations, it is probably useful only for short-cooled processing of highly irradiated fuel such as liquid metal fast breeder reactor fuel, which is the system for which it was originally proposed. Some of the fission products will probably be volatile in the relatively high-temperature processes normally used in forming the final uranium-plutonium oxide product; therefore, considerable development will be needed in the fuel refabrication area, even though a relatively low-temperature process such as sol-gel is used in forming the oxides.

As an alternative to all of the above schemes for fuel spiking, a gamma-emitting isotope formed by reactor irradiation can be added to the uranium-plutonium stream during processing. The most likely candidate is cobalt-60. This isotope can be prepared in large quantities in reactors, but its neutron absorption does not impose a large penalty in the refabricated fuel, and the nuclear properties are near ideal. It should follow the uranium-plutonium through Coprecal or direct denitration. It has not been determined whether cobalt remains uniformly mixed with the mixed oxides during the oxide reduction and sintering steps; This determination is decisive for the use of cobalt as a spike.

Some of the problems associated with the $^{233}$U-thorium fuel cycle will also be discussed. The realization of this cycle in reactors is sufficiently difficult that the $^{235}$U-plutonium cycle has always been preferred; the neutron economy in reactors is more favorable in the latter case, and breeder concepts are readily developed. Uranium-thorium cycles have primarily been associated with gas-cooled reactors because the neutron economy for this cycle is most favorable. However, recently, the use of thorium light water reactors or heavy water reactors has been reconsidered. The many problems encountered in processing gas-cooled reactor fuels have been addressed primarily by ORNL and General Atomic workers, who, in developing technology for that program, have made significant contributions to the chemistry of uranium-thorium separations processes that will be generally useful.

The first difficulty with thorium oxide is that it resists dissolution under conditions where uranium oxide is readily dissolved. This problem is not so severe in the GCR concepts, because the fuel particle size is small, and there is a preliminary mechanical treatment. However, for fuel pellets of the size normally used in light water reactors, the surface area is quite small by comparison, and the dissolution rate is lower than that for the corresponding $UO_2$ fuels. Furthermore, there does not seem to be any straightforward chemical way of attacking this. After many tries, in many laboratories around the world, no one has found a better way of dissolving $Th_2$ than $HNO_3$ catalyzed with some but not too much flouride. Not too much, because $ThF_4$ precipitates if the fluoride concentration becomes too high. It is necessary then to work within a fairly narrow range of dissolvent compositions, with the acidity as high as practical in respect to the materials of construction to be used and the subsequent separations operations. $HNO_3$-HF is of course corrosive to all common materials of construction, at least to some extent, and so another chemical problem is the selection of the most appropriate material.

The achievement of adequate processing rates in processing $UO_2$-$ThO_2$ fuels would probably depend upon the following factors: 1) it would be desirable to develop a fuel design that would permit removal of the irradiated fuel from the cladding and mechanical size reduction to increase its surface area, and

2) the fuel fabrication process should be chosen with reprocessing in mind. Savannah River Laboratory studies many years ago showed improved dissolution resulting from the incorporation of additives such as MgO in the fuel. In addition, the firing and compaction regime should be optimized toward this goal.

Once the thorium has been dissolved, there will still be some practical problems in separation, even though the Thorex process has been operated on a large scale in several facilities. One problem is the tendency of thorium loaded-TBP-organic phase to split into two phases, which can cause problems in the operation of solvent extraction contactors. Mixer-settlers have trouble with this, but pulse columns can probably accommodate both phases satisfactorily. Another problem is that the behavior of any plutonium present is not well characterized; uranium-thorium-plutonium mixtures have not been well studied. Finally, thorium tends to form extractable compounds with the degradation products of TBP, and the cleaning of the resulting solvent for reuse will have to be tested. In general, there is a need for elaboration and testing of the separations process. The process will be slow in coming because no representative fuel is available now, and won't be for at least a few years.

//

SEPARATED PLUTONIUM SOLVENT EXTRACTION FLOWSHEET

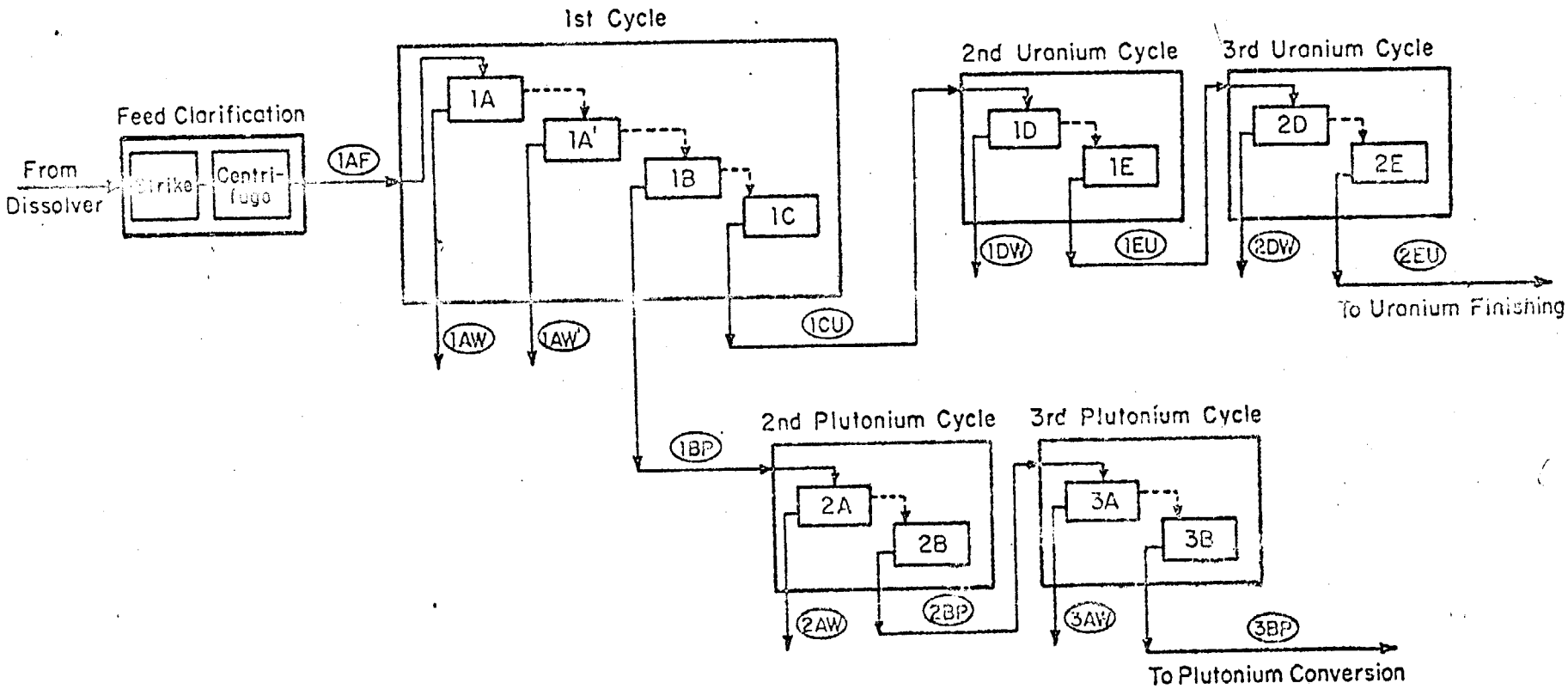


SLIDE 1. Generalized Solvent Extraction Flowsheet

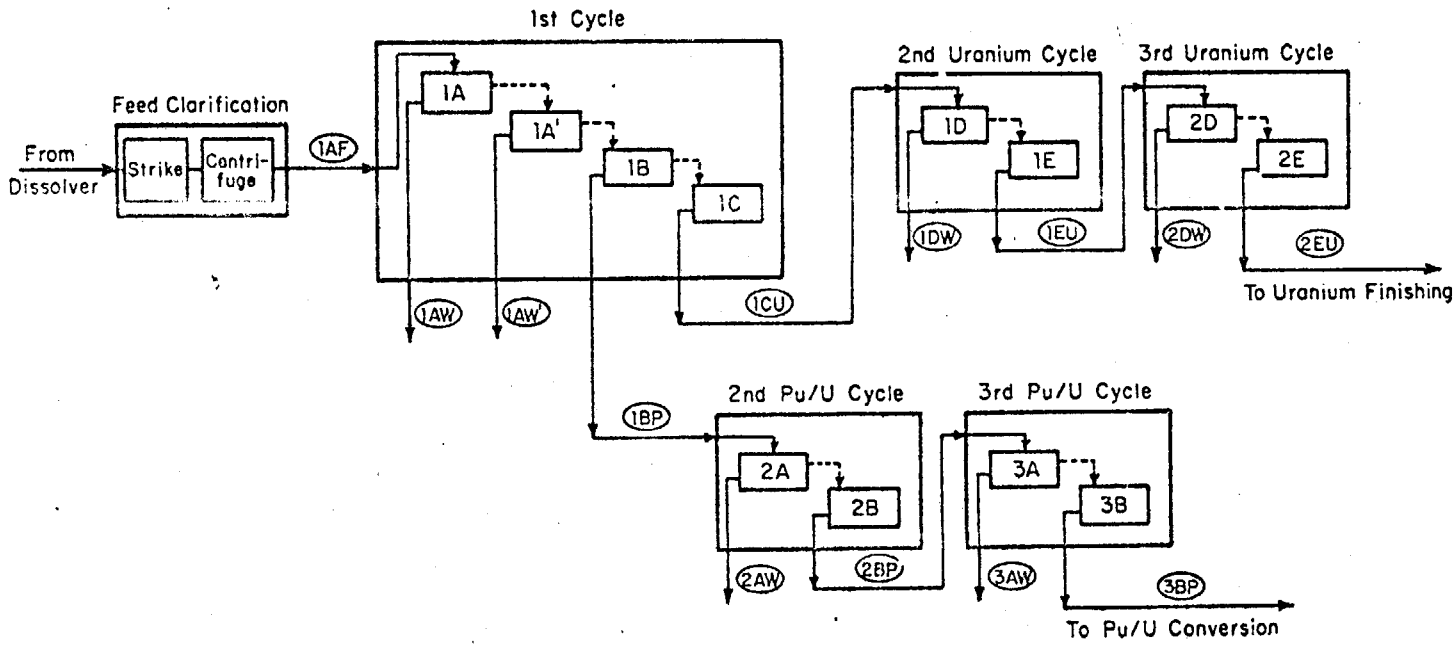


SLIDE 2. Coprocessing Solvent Extraction Flowsheet

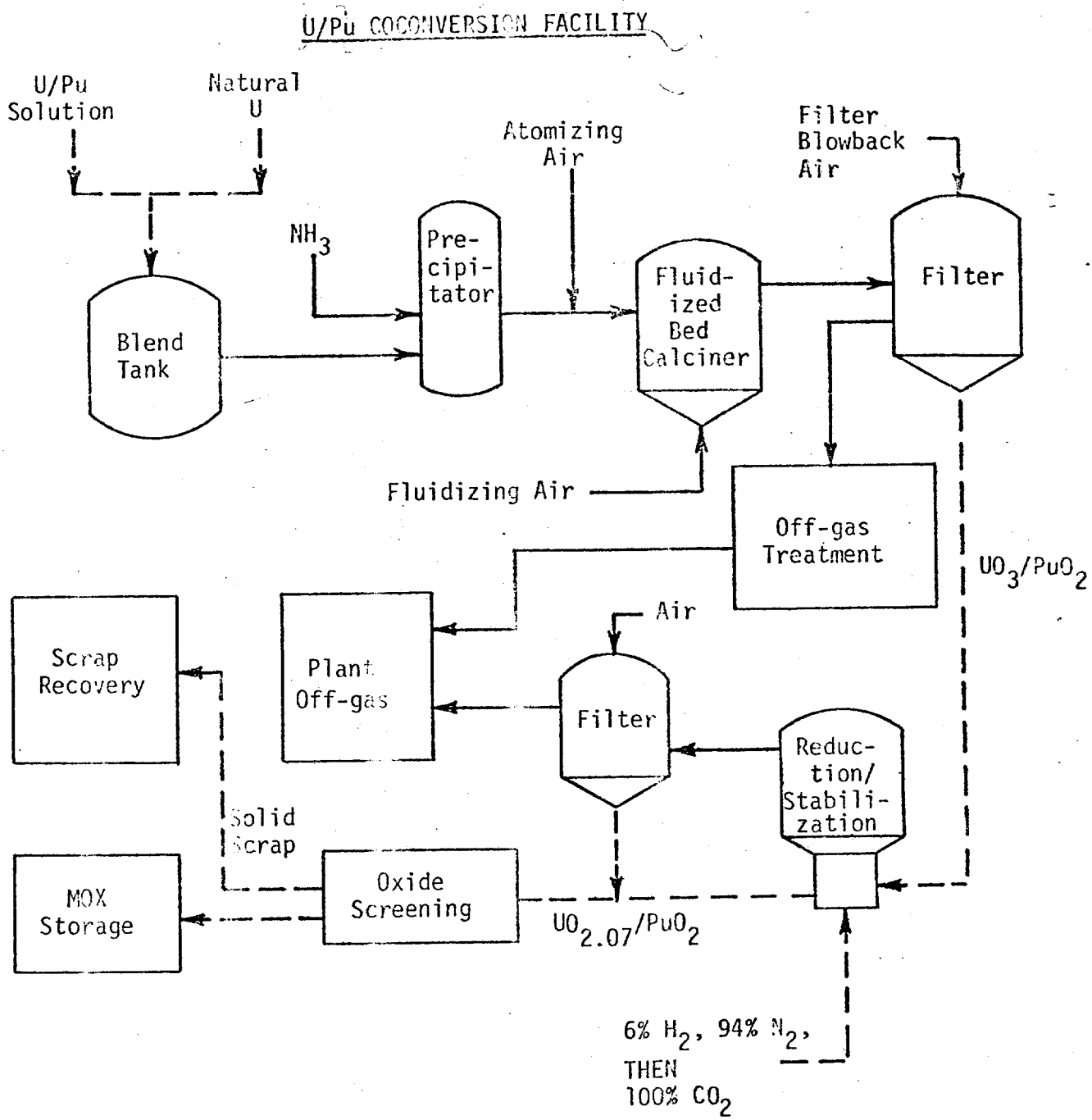


SLIDE 3. U/Pu CoConversion Facility

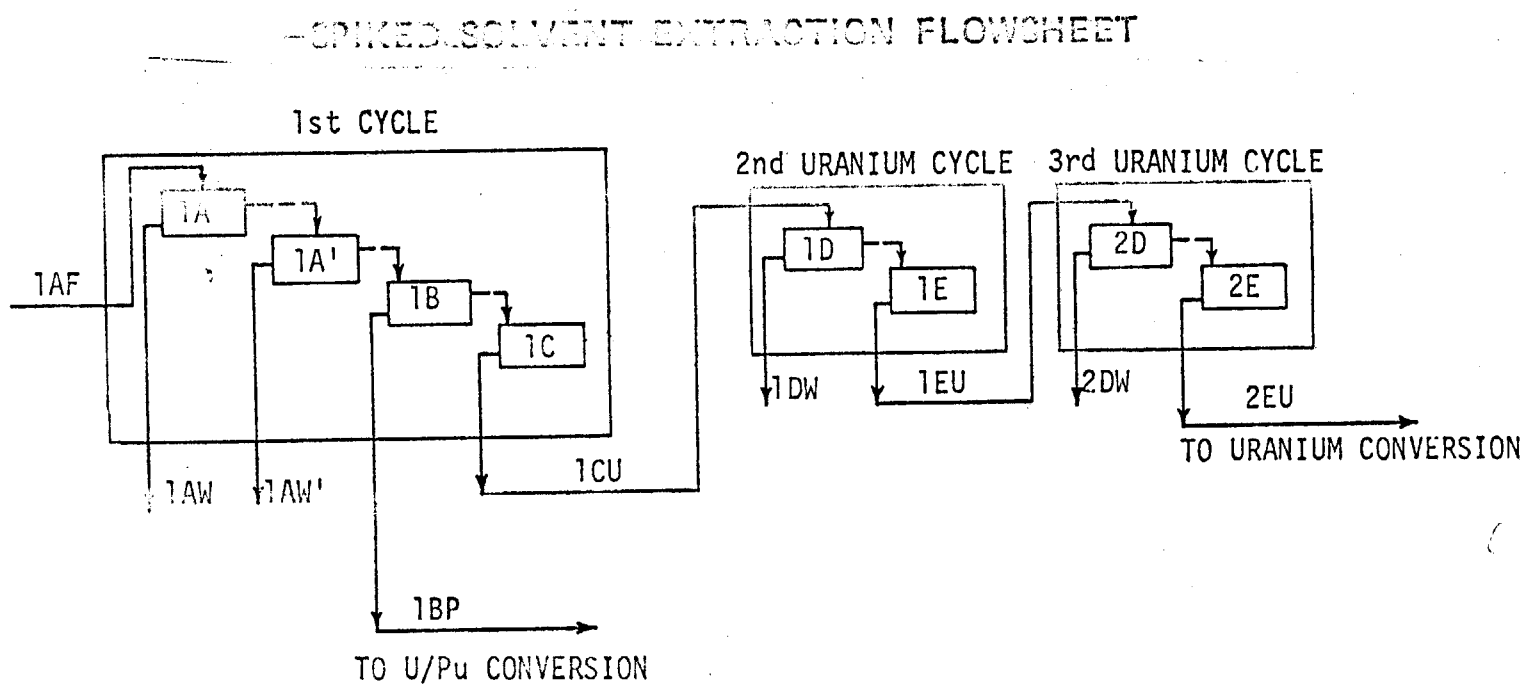


SLIDE 4. Spiked Solvent Extraction Flowsheet