RECORDS ADMINISTRATION
R0139133

DP-1545

PRELIMINARY EVALUATION OF ALTERNATIVE FORMS FOR IMMOBILIZATION OF SAVANNAH RIVER PLANT HIGH-LEVEL WASTE

J. A. Stone, S. T. Goforth, Jr., and P. K. Smith

TIS FILE
RECORD COPY

E. I. du Pont de Nemours & Co. (Inc.)
Savannah River Laboratory
Aiken, South Carolina 29801

PREPARED FOR THE U. S. DEPARTMENT OF ENERGY UNDER CONTRACT DE-AC09-76SR00001

DISCLAIMER

This report was prepared as an account of work sponsored by the United States Government. Neither the United States nor the United States Department of Energy, nor any of their employees, make any warranty, express or implied, or assumes any legal liability or responsibility for the accuracy, completeness, or usefulness of any information, apparatus, product, or process disclosed, or represents that its use would not infringe privately owned rights. Reference herein to any specific commercial product, process, or service by trade name, mark, manufacturer, or otherwise, does not necessarily constitute or imply its endorsement, recommendation, or favoring by the United States Government or any agency thereof. The views and opinions of authors expressed herein do not necessarily state or reflect those of the United States Government or any agency thereof.

Printed in the United States of America
Available from

National Technical Information Service
U. S. Department of Commerce
5285 Port Royal Road
Springfield, Virginia 22161

Price: Printed Copy A05; Microfiche A01

726248

DP-1545

Distribution Category: UC-70

PRELIMINARY EVALUATION OF ALTERNATIVE FORMS FOR IMMOBILIZATION OF SAVANNAH RIVER PLANT HIGH-LEVEL WASTE

by

J. A. Stone, S. T. Goforth, Jr., and P. K. Smith

Approved by

J. D. Spencer, Research Manager
Fuel Cycle Technology Division

Publication Date: December 1979

E. I. du Pont de Nemours & Co. (Inc.)
Savannah River Laboratory
Aiken, South Carolina 29801

PREPARED FOR THE U. S. DEPARTMENT OF ENERGY UNDER CONTRACT DE-AC09-76SR00001

ABSTRACT

An evaluation of available information on eleven alternative solid forms for immobilization of SRP high-level waste has been completed. Based on the assessment of both product and process characteristics, four forms were selected for more detailed evaluation: (1) borosilicate glass made in the reference process, (2) a high-silica glass made from a porous glass matrix, (3) crystalline ceramics such as supercalcine or SYNROC, and (4) ceramics coated with an impervious barrier. The assessment includes a discussion of product and process characteristics for each of the eleven forms, a cross comparison of these characteristics for the forms, and the bases for selecting the most promising forms for further study.

CONTENTS

Introduction 5

Summary 7

Comparison of Waste Forms 9

Evaluation Methods 11

Bases for Waste Form Evaluation 12

Waste Description 12
Process Derivation 15
Selection Factors for Waste-Form Products 19
Selection Factors for Waste-Form Processes 19

Additional Considerations 20

Radionuclide Content of SRP Waste 20
Long-Term Stability of Metal Barriers 20
Process Tolerance 20
Process Flexibility 21
Process Complexity 21
Quality Assurance 21
Process Safety 22
Processing Dusty Powders 22
High Temperature Loss of Radionuclides 22
Effects of Minor Components 22
Repository Requirements 22

Acknowledgment 22

Bibliography 23

Appendix A1 Borosilicate Glass 24
Appendix A2 High-Silica Glass 31
Appendix A3 Concrete (FUETAP Process) 37
Appendix A4 Hot-Pressed Concrete 44
Appendix A5 Supercalcine Ceramic 50
Appendix A6 SYNROC Ceramic 57
Appendix A7 Cermet (Urea Process) 64
Appendix A8 Glass Marbles in Metal Matrix 71
Appendix A9 Ceramic Pellets in Metal Matrix 77
Appendix A10 Coated Ceramic 83
Appendix A11 Coated Ceramic via Sol-Gel 89

Appendix B Criteria for Rating Waste Forms 93

PRELIMINARY EVALUATION OF ALTERNATIVE FORMS FOR IMMOBILIZATION OF SAVANNAH RIVER PLANT HIGH-LEVEL WASTE

INTRODUCTION

Approximately 22 million gallons of high-level nuclear waste has accumulated at the Savannah River Plant (SRP) of the Department of Energy (DOE) from production of defense materials and other radionuclides during the past 25 years. This waste has come primarily from the chemical reprocessing of nuclear reactor fuel and target elements from the production reactors. It is stored as an alkaline solution in high-integrity, double-walled tanks at SRP. Methods for the permanent immobilization of this high-level waste are being developed as part of DOE's national plan for long-term management of all Federally owned reprocessing waste. The Office of Nuclear Waste Isolation at Battelle Memorial Institute has the responsibility for development of Federal repositories to receive the immobilized waste, and the Du Pont program is coordinated with theirs.

Borosilicate glass was selected in 1977 as the reference form for immobilization of SRP high-level waste after review of available waste form information. Following this decision a major effort was undertaken to develop the required technology. Three major steps are required at SRP as part of the overall waste disposal system: 1) retrieval of waste from storage tanks, 2) separation of contaminated solids and soluble radionuclides from the bulk of the alkaline solution, and decontamination and disposal of that solution and its associated soluble salts, and 3) concentration and immobilization of the contaminated solids. Du Pont is doing extensive research and development and engineering on all three steps. Conceptual design of a Defense Waste Processing Facility (DWPF) has shown that the largest portion of plant space and expenditures is associated with separation of insoluble solids from soluble salts and decontamination of the salt solution. About 97% of the solids and salt fed from the waste tanks to the DWPF are decontaminated and 3% are immobilized in the waste form. Less than 20% of the projected DWPF canyon space is associated with the actual immobilization of the 3% of the feed in which the contamination is concentrated. Therefore, selection of the waste form for immobilization is expected to have minor impact on overall space requirements and cost, because immobilization accounts for a small portion of the total cost.

Since borosilicate glass was selected as the reference form, a number of alternative waste forms have been proposed as having superior product performance or superior process characteristics to those of glass. For example, neither steam- cured (FUETAP) concrete nor hot-pressed concrete was evaluated in 1977. New alternative forms using crystalline ceramics (SYNROC or super-calcine) also have been proposed during this period.

A new program, of which this study is the first step, is providing the technical basis for final waste form selection for the DWPF by the end of FY-1983. In this program, all viable alternative forms will be evaluated and compared to the reference borosilicate glass. This investigation will include the effect of waste form choice on all aspects of the waste disposal system. For example, the performance of the forms during transportation and after emplacement in a variety of potential repositories is being studied. In addition, conceptual processes for production are being evaluated for exposure risk, general safety, complexity and operability, quality control, and cost.

The initial phase of the program is a comparison of eleven alternative waste forms to select a limited number for more detailed study. This work is directed specifically at SRP high-level waste which is different from defense waste at Hanford and INEL, from NFS reprocessing waste stored at West Valley, N. Y., and from potential commercial reprocessing waste. Therefore, conclusions from this study are directly applicable only to SRP high-level waste.

Most of the waste forms considered lack detailed experimental data on the factors evaluated. However, to permit timely selection of waste forms for more detailed evaluation, this preliminary screening evaluation used published information supplemented by discussions with the proponents and technical judgment to develop the alternative waste forms comparison. Future programs will refine this data base and reduce uncertainties in the comparison.

SUMMARY

Eleven waste forms, representing all known proposed formulations with possible application to SRP waste, were evaluated in terms of process complexity and potential product performance. The bases for this comparison are listed in Table 1. Each form was given a numerical rating by assigning values to process and product attributes which were weighted by importance. Comparison of these ratings showed that:

- Borosilicate glass has the highest combined rating.
- Six of the eleven forms potentially have better product properties than borosilicate glass.
- Coated forms have the best potential product performance. However, their process characteristics are among the poorest.
- Concrete waste forms have the poorest product characteristics, but have good process characteristics.

The waste forms with the highest numerical rating and potential for product performance superior to borosilicate glass were selected for additional, more detailed study. In cases where great similarity of process and product were found, a generic form was chosen for study. Specific selection will be made at a later date when additional data are available. The alternatives selected are:

- Borosilicate glass
- High-silica glass
- Tailored crystalline ceramics such as supercalcine ceramic or SYNROC
- Ceramics coated with an impervious barrier in which a coating provides the key protection. Two process routes will be considered for production of the ceramic: 1) traditional calcination and sintering and 2) sol-gel technology for dust-free processing.

Progress in developing all proposed forms will continue to be monitored, and the detailed study will include others that show sufficient potential.

TABLE 1

Bases for Alternative Waste Form Evaluation

1) Selected forms must have the potential for significantly lower risks due to radioactive exposure to man than borosilicate glass. This includes lower exposure during processing and transportation, as well as to future generations through release from the repository.

2) Leachability and long-term stability are the most important characteristics of product performance.

3) Process and product characteristics are assumed to be of equal importance in overall evaluation of a form.

4) The waste form comes in contact with any water, brine, or other aqueous solution that may be present in the repository.

5) Assessment of performance potential for forms is based on the judgment of proponents as corroborated by other sources, if data are not available.

6) Process simplicity is the most important process characteristic.

7) For cases where no demonstrated process exists for production of proposed waste forms, conceptual processes were specified with the aid of proponents.

8) No credit has been taken for the multibarrier protection provided by the canister, overpack, and repository.

COMPARISON OF WASTE FORMS

In this study, eleven waste forms are evaluated for SRP high-level waste. Detailed descriptions of each product and process are given in Appendix A. To compare the waste forms, twelve factors were evaluated for each form, for 132 separate judgments. These selection factors are discussed in the following sections of this report. To aid in this task, a numerical scheme is used to rate each factor for a given waste form on a scale from 1 to 5 (with 5 best). Definitions of the grades for each factor are given in Appendix B.

The numerical comparison of waste forms is shown in Table 2. For an overall comparison, numerical weights are assigned to each selection factor, representing 12 additional judgments on the relative importance of each factor. The following principles guide the assignment of weights:

- Product and process considerations should have about equal importance.
- Product factors describing ability of the waste form to retain radionuclides, such as leachability and long-term stability, should have greater weights than other product factors.
- Process simplicity should have greater weight than other process factors.

Table 2 gives the weighted sum of product factors for each waste form; these scores provide a relative ranking in terms of potential product quality. Similarly, the weighted sum of process factors provides a ranking of the processes (mostly conceptual) for manufacturing each waste form. The overall ranking of the waste forms is obtained by combining the product and process scores.

This numerical evaluation method is not an end in itself. It is simply a convenient means of expressing our judgments and presenting the results in a concise manner.

Principal conclusions from the numerical evaluation of the waste forms are:

- Borosilicate glass, the reference waste form, has the highest overall score.
- Six of the waste forms have potentially better product properties than borosilicate glass.

TABLE 2

Numerical Evaluation Of Alternative Waste Form Selection Factors

	PRODUCT FACTORS								PROCESS FACTORS						
	Development Status	Waste Loading	Leachability	Long-Term Stability	Thermal Conductivity	Thermal Stability	Transportation Safety	WEIGHTED SUM	Complexity	State of Development	Quality Assurance	Yield and Recycle	Process Safety	WEIGHTED SUM	OVERALL SCORE
Borosilicate Glass	5	3	3	3	2	5	4	66	4	5	3	3	4	69	135
High-Silica Glass	2	2	5	3	2	5	4	68	3	2	3	2	4	51	119
FUETAP Concrete	3	1	1	2	2	2	2	33	5	4	3	2	4	69	102
Hot-Pressed Concrete	2	3	1	4	2	3	3	49	3	1	3	2	3	45	94
Supercalcine Ceramic	2	5	4	5	2	5	5	81	2	1	1	1	3	30	111
SYNROC Ceramic	3	5	4	5	2	5	5	83	2	1	1	1	2	27	110
Cermet (Urea Process)	2	3	3	1	2	5	5	52	1	2	5	1	2	36	88
Glass Marbles in Metal Matrix	4	2	3	3	3	4	2	57	3	4	4	3	3	60	117
Ceramic Pellets in Metal Matrix	3	4	4	3	4	4	3	67	2	2	2	1	3	36	103
Coated Ceramic	3	4	5	5	2	5	5	86	2	2	2	1	2	33	119
Coated Ceramic via Sol-Gel	1	4	5	5	2	5	5	82	2	3	2	1	4	42	124
FACTOR WEIGHTS	2	2	5	5	1	2	2		6	3	3	3	3		

- Coated waste forms have the highest product scores, but are among the poorest in process characteristics.

- Concrete waste forms have the poorest product scores, but have good process characteristics.

One objective of this study is to provide a basis for selecting 3 to 5 of the alternative waste forms for more intensive evaluation. The following criteria were applied in making the selection.

1) Only those waste forms with product properties potentially better than borosilicate glass merit further consideration.

2) Waste forms with similar product and process characteristics may be combined for further consideration as a generic waste form.

3) Waste forms with the highest overall scores, that meet the first two criteria, should be selected.

On this basis, we have selected the following waste forms for more detailed evaluation as alternatives to borosilicate glass:

- High-silica glass (Porous Glass Matrix Process)

- Generic tailored crystalline ceramic - supercalcine ceramic and SYNROC

- Generic coated ceramic - with option for Sol-Gel Process Step

Concretes, cermet, and uncoated metal-matrix forms are not selected because of relatively poor product and/or process characteristics; further consideration of these forms would have to be based on factors not included in this study.

EVALUATION METHODS

The waste forms discussed in this report have been proposed for solidification of SRP waste, and have been studied at laboratories in the United States and elsewhere. Information on each waste form was obtained from published articles and reports; also, in most cases, detailed discussions were held with proponents of each waste form. Several review articles and meeting proceeedings that considered a variety of alternative waste forms were helpful for initial screening.

The eleven forms selected for this study have the following features:

- Compatibility with SRP high-level waste.
- Potentially superior product attributes.
- Development of form and process sufficiently advanced to permit evaluation.
- Interest in the waste form, as evidenced by ongoing related development at one or more U. S. laboratories.

On this basis, several waste forms were not considered because they were rejected for SRP waste several years ago. The eleven forms selected for this study were drawn from advances in technology during the past five years. Recognizing that some forms might be eliminated prematurely by this initial screening, either because of insufficient available information or because of little development, new information will be carefully monitored and assessments of alternative waste forms will be updated as needed. The forms selected for this study, together with their major advantages and disadvantages, are listed in Table 3.

Properties were estimated when experimental information was lacking. Uncertainties are large for product and process characteristics of most of the waste forms considered.

BASES FOR WASTE-FORM EVALUATION

Waste Description

SRP wastes are alkaline mixtures of wastes that have been neutralized with excess NaOH and other wastes which are inherently alkaline. They have precipitated an insoluble sludge containing most of the radionuclides except cesium, leaving a salt solution supernate. The alkaline wastes have relatively low radionuclide concentrations. Because of the variety of reactor and separations processes which have generated the wastes, they also tend to be very heterogeneous.

The reference waste solidification process is shown in Figure 1. The waste will be preconditioned extensively to separate the radionuclides and sludge from the salt. Sludge and supernate are pumped separately from the waste tanks. The sludge stream is washed to remove about 95 wt % of the soluble salts. The supernate stream, which contains mainly salt, is treated to remove suspended sludge and dissolved radionuclides, including most fission products and actinides. The preconditioning, which requires a major portion

TABLE 3

Features Of Alternative Waste Forms

Waste Form	*Potential Advantages*	*Potential Disadvantages*
Borosilicate Glass	Best developed Relatively simple process	Hydrothermal reactions possible Glass melter required
High-Silica Glass	Very low leachability	Hydrothermal reactions possible
FUETAP Concrete	Relatively simple process	Relatively high leachability Poor long-term stability Low waste loading
Hot-Pressed Concrete	Good long-term stability	Relatively high leachability Large hot-press required
Supercalcine Ceramic	Low leachability Excellent long-term stability High waste loading	Complex process Hot isostatic press may be required
SYNROC Ceramic	Low leachability Excellent long-term stability High waste loading	Complex process Hot isostatic press may be required
Cermet (Urea Process)	Ease of quality assurance	Long-term metal corrosion Very complex process Large amounts of urea and off-gas
Glass Marbles in Metal Matrix	Well developed Two barriers	Low-melting metal required Large surface exposed if matrix fails Glass melter required
Ceramic Pellets in Metal Matrix	Two barriers	Complex process Large surface exposed if matrix fails
Coated Ceramic	Multiple barriers Very low leachability Excellent long-term stability	Very complex process Coating technology required
Coated Ceramic via Sol-Gel	Multiple barriers Very low leachability Excellent long-term stability No dry powders in process	Conceptual product only Complex process Sol-Gel and coating technology required

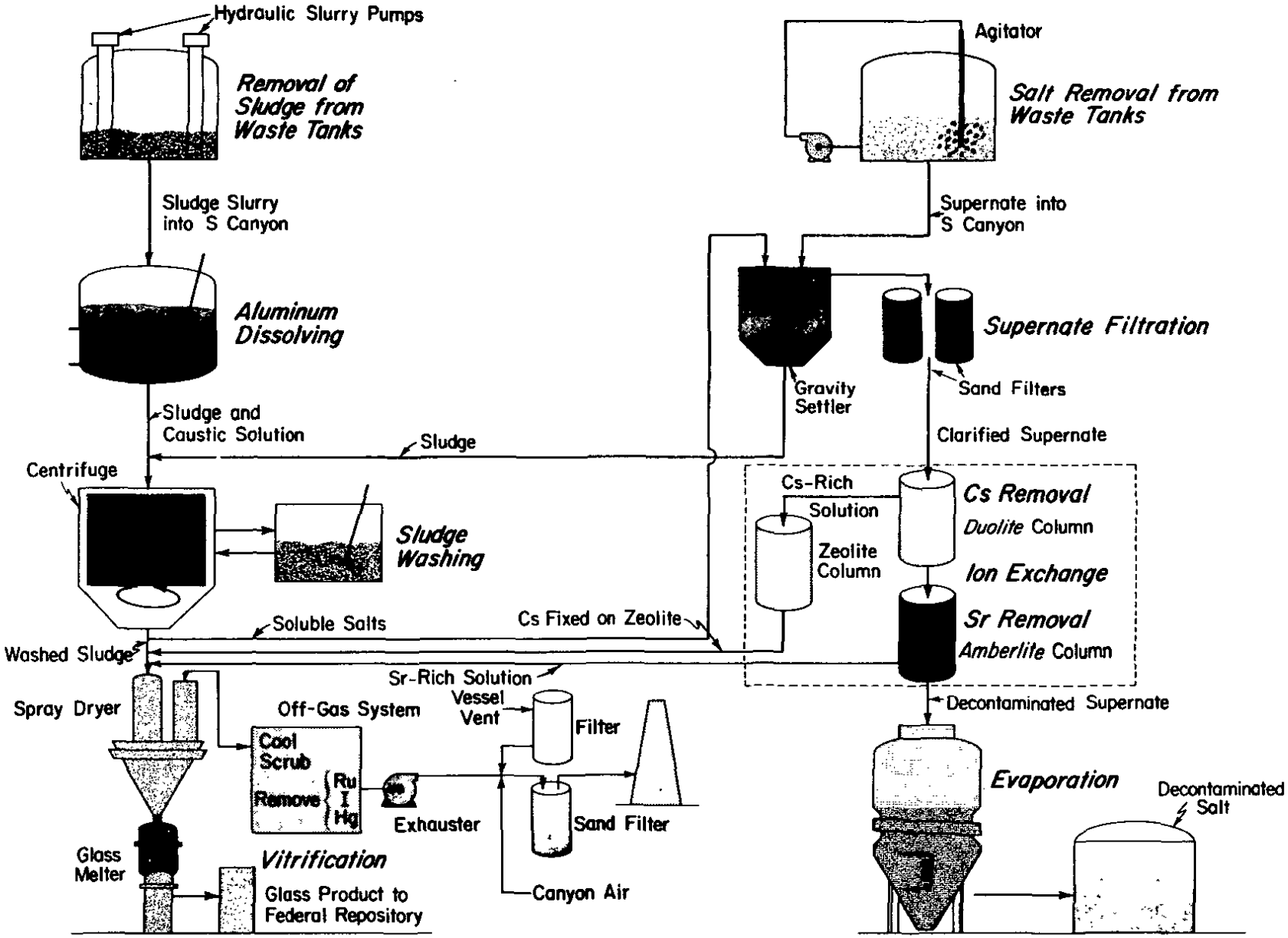

FIGURE 1. Reference Process for Immobilization of SRP Waste

of the canyon space in the DWPF, yields three feed streams to the solidification process:

1) The major stream is a slurry of washed sludge containing hydrous oxides of metallic elements such as iron, aluminum, and manganese. About 75% of the aluminum is removed by caustic washing; this step is desirable for the reference borosilicate glass waste form but is not required for some of the other waste forms. Most of the radionuclides in the waste, including ^{90}Sr, ^{239}Pu, and rare-earth fission products, are in the sludge.

2) The second stream is a slurry of aluminosilicate zeolite grains containing adsorbed ^{137}Cs from the supernate fraction of SRP waste. The volume and mass of this stream is relatively small, but it contains nearly all of the ^{137}Cs radionuclide.

3) The third stream, also minor, contains dissolved Na-EDTA, the eluting agent for ion-exchange separation of ^{90}Sr from the supernate fraction of SRP waste. This stream, labelled Sr Concentrate, contains only a small part of total ^{90}Sr.

Average composition of the waste after mixing these three streams is given in Table 4. Extensive blending of waste, both within and between waste tanks, is planned as part of the feed preconditioning, and Table 4 provides the basis for plant design. However, significant variations in feed may be experienced as a result of diverse sludge compositions. Table 5 shows the extremes in major element composition. The immobilization process must be able to accept feed satisfactorily within these limits without degradation of product quality. The reference process has an aluminum dissolving step which may or may not be required with other alternatives. Therefore, compositions with and without that step are included in Table 5. Minor constituents in the feed are shown in Table 6.

Process Derivation

Conceptual process flowsheets were developed by extrapolating procedures used in laboratory-scale preparations to large-scale unit operations. In several cases where no process has been demonstrated, a conceptual process was based on the step-by-step laboratory procedures used by proponents to make samples. Although the flowsheets use only existing technology, nearly all have key operations that have not been demonstrated in a remote, shielded environment. Examples of such operations are glass sintering, concrete mixing, and hot isostatic pressing.

TABLE 4

Design Basis Feed Stream to Solidification Process

	Flow Rate	
	lb/hr	*lb-mole/hr*
Salts		
$NaNO_3$	0.4260	5.01E-3
$NaNO_2$	0.1649	2.39E-3
$NaAlO_2$	0.1600	1.95E-3
NaOH	0.8330	20.83E-3
Na_2CO_3	6.908E-2	0.65E-3
Na_2SO_4	9.254E-2	0.65E-3
$Na_2C_2O_4$	1.025E-3	0.76E-5
NaCl	3.218E-3	0.55E-4
NaF	2.267E-4	0.54E-5
Na(HgO)OH	5.574E-4	0.22E-5
$C_6H_{10}O_5$	2.404E-5	0.15E-6
Na_4(EDTA)	4.575	12.04E-3
$NaBO_2$	6.562E-6	0.10E-6
	6.326	
Solids		
$NaNO_3$	1.433	16.86E-3
NaCl	1.549	26.51E-3
NaF	0.1615	3.85E-3
C	2.100	17.50E-2
Hg	1.038	5.17E-3
HgI_2	3.259	7.16E-3
Fe_2O_3	30.03	18.80E-2
Al_2O_3	6.094	59.75E-3
MnO_2	8.478	97.45E-3
U_3O_8	2.810	3.34E-3
CaO	2.237	39.95E-3
NiO	3.723	49.84E-3
SiO_2	2.717	45.28E-3
Na_2O	2.425	39.11E-3
Na_2SO_4	0.7729	5.44E-3
W.O.H.[a]	14.59	81.06E-2
Zeolite	6.295	
	89.712	
Water[b]	1337	
Total, lb/hr	1433	

a. Water of hydration.
b. Water for slurry.

TABLE 5

Compositions of SRP Waste Calcines[a]

Component	Without Al Removal (wt %)			With Al Removal (wt %)		
	High Fe	Composite	High Al	High Fe	Composite	High Al
Fe_2O_3	53.17	36.13	5.32	55.90	47.16	14.80
Al_2O_3	4.89	28.26	76.05	1.29	9.24	50.77
MnO_2	3.56	9.94	4.37	3.74	12.98	12.16
U_3O_8	12.34	3.26	1.28	12.98	4.25	3.57
CaO	3.62	2.69	0.35	3.80	3.51	0.97
NiO	9.08	4.47	0.78	9.54	5.84	2.17
SiO_2	0.40	0.85	0.56	<0.40	1.12	1.57
Na_2O	4.52	5.08	1.96	4.75	6.63	5.41
Na_2SO_4	<0.50	0.93	<0.50	<0.50	1.21	<0.50
Zeolite[b]	8.82	8.93	9.33	8.00	8.05	8.58

a. Major elements only.

b. Ion-Siv IE-95; mixture of $CaAl_2Si_4O_{12} \cdot 6H_2O$ and $(NaKCa)_3Al_3SiO_{24} \cdot 8H_2O$.

TABLE 6

Minor Elements in SRP Waste Sludges[a]

Element	*Range, Wt %*	*Element*	*Range, Wt %*
C	0-16.8	Y	0.01-0.05
Nd	0.3-1.0	Ag	0-0.3
Zr	0.1-0.5	Pm	0-0.04
Cr	0.01-0.45	Pb	0.1-0.5
Ru	0.03-0.5	Ti	0-0.1
Ba	0.1-0.25	Sm	0-0.05
Ce	0.05-1.0	Eu	0-0.02
K	0.02-0.14	V	0-0.01
Cl	0-2.0	Rh	0-0.05
Sr	0-0.15	F	0-0.15
La	0.04-0.3	Cs	0-0.06
Pr	0.04-0.2	B	0-0.05
S	0.02-0.5	Cd	0-0.05
P	0.03-0.3	Pd	0-0.03
Zn	0.04-0.5	Mo	0-0.01
Th	0-0.18	Eu	0-0.01
Mg	0.06-0.3	Co	0-0.01
Cu	0.03-0.15		
Nb	0.02-0.1		
Hg	0.1-2.8		

a. Wt % in washed, dried sludges.

Selection Factors for Waste Form Products

Rating criteria for each product factor are given in Appendix B. The product factors evaluated in this study are:

- Development status.
- Waste loading - weight fraction and density of waste in the solid form; sensitivity to variations in waste composition and loading.
- Leachability - a measure of release of radionuclides to the environment when the waste form contacts water. Leachability typically is measured for ^{90}Sr, ^{137}Cs, and ^{239}Pu. Leachability under possible repository conditions (temperature and pressure; brine or ground water) is of principal interest. However, data are most often available for leaching in distilled water at ambient conditions.
- Long-term stability - chemical and mechanical durability under conceivable repository conditions, including the long-term effects of heat, radiation, and transmutation.
- Thermal conductivity.
- Thermal stability - including emission of gases at high temperatures.
- Transportation safety - fire resistance; dispersability and impact resistance; compressive and tensile strength.

Selection Factors for Waste-Form Processes

Rating criteria for each process factor are given in Appendix B. The process factors evaluated in this study are:

- Complexity - number of operations; use of high temperatures and/or high pressures; remotability. Capital and operating costs are not considered here.
- State of development - including applicable large-scale experience.
- Quality assurance - ease of determining acceptable products during production; ease of sampling and analysis.
- Yield and recycle - emphasizing ease of reworking off-specification products.
- Process safety - unusual hazards.

ADDITIONAL CONSIDERATIONS

These conditions are inherent in the selection factors evaluated and are particularly applicable to SRP high-level waste. Features to be taken into account include the remote, shielded nature of the DWPF and the complexity of SRP waste.

Radionuclide Content of SRP Waste

The radionuclide content of SRP sludge is typically only 1% that of commercial waste. Most of SRP waste consists of inert chemicals added in the course of separations processing and waste neutralization. Consequently, SRP sludge possesses a large dilution factor for the radionuclides in an inert matrix that inherently offers a barrier to leachability and dispersion in any solid waste form. As a result, forms with high waste loading are attractive. Because of the lower radionuclide content, heat generation and internal temperature gradients in a monolith of SRP waste will be considerably less than for commercial waste. Because of lower heat, the effects of hydrothermal leaching, thermal stresses, and thermal transport of chemical species are expected to be considerably less for SRP wastes in shipping and in a repository than for equivalently loaded commercial wastes.

Long-Term Stability of Metal Barriers

For the range of possible leaching conditions (temperature, pressure, pH, Eh) in a repository, metal barriers, such as a matrix, overcoat, or canister, will eventually be pentrated, and therefore, cannot be relief upon for the long-term retention of radionuclides in the waste form. Metallic components of a waste form would be useful primarily for transportation safety and for the early storage period when most of the heat is generated. After a metal barrier is penetrated, only the nonmetallic components will retard radionuclide release to the geologic environment. Even after 300 years, protection is still required for potentially volatile and soluble ^{129}I and ^{99}Tc, if present in the waste form, as well as for relatively nonvolatile and insoluble alpha emitters. Consequently, the primary concern for long-range fixation within the waste form is with the nonmetallic matrix rather than any metallic barrier.

Process Tolerance

Waste forms must tolerate variations in composition, density, and integrity, during processing, or else unacceptably low yields and high rework will result. A number of factors suggest that the protection promised by proponents of some types of waste forms will

be difficult to achieve reliably in production. Such factors include past experience operating remote processes in nuclear facilities, diverse compositions and characteristics of SRP high-level sludges, and the inherent complexity of some types of waste forms.

Process Flexibility

The process to produce waste forms should be flexible enough to accommodate some variability in the sludge stream fed to it. SRP high-level sludges have substantial tank-to-tank variations in composition and particle characteristics. Other tank-to-tank variations include abundance differences by a factor of 5 for the more than 40 elements in SRP sludges, and differences in soluble salt content of the sludges, as shown in Tables 5 and 6. Blending these sludges so well as to eliminate all variations between batches appears unlikely, so that process flexibility is essential.

Other variations may occur. The particle-size distribution of sludges is bimodal, and the two components vary in relative amounts tank-to-tank. This suggests that the kinetics of producing the waste form may vary. The waste also contains sand, coal, and zeolite in large particles, 400 to 600 μm diameter. These, and possibly other sludges and filter beds generated during operations, must be accommodated by the process and waste form.

Process Complexity

A simple process is desirable both for reliable operability and for process safety. Large pieces of complex mechanical equipment that might require extensive maintenance should be avoided. The process should be relatively insensitive to minor changes in operating conditions. The probability of successful production in remote nuclear facilities is increased by using manufacturing technology that has proved reliable in the chemical industry.

Quality Assurance

Quality assurance for large monoliths may be very difficult. All of the characteristics required of a waste form for protection of the environment may not be uniform throughout a monolith, and representative samples may be difficult to obtain. Forms made in small units are much more attractive, because that whole unit may be analyzed destructively. Another consideration is the ability to perform the analyses routinely. For example, routine assurance that several solid-state phases are present in the proper proportions and with the proper grain size might be very difficult.

Process Safety

In the system of waste-form manufacture, transportation, emplacement, and repository storage, a major fraction of total risk to man occurs in the manufacturing step. Thus, process safety is considered a major factor in evaluating alternative waste forms.

Processing Dusty Powders

Handling of dry, finely divided, radioactive powders is particularly troublesome for safety and for maintenance of equipment. Processes that avoid dusty powders are preferred.

High-Temperature Loss of Radionuclides

At high temperatures, radioisotopes of Ru, I, Cs, Tc, Po, Sn, Sb, and Te may volatilize appreciably. Nonradioactive elements such as Hg and Mo also will migrate at high temperatures. These volatiles create special problems for process off-gas systems, and require additional techniques for capture, recycle, and immobilization in the waste form or other disposition. Thus, waste forms that do not require temperatures high enough to promote significant volatilization of radioactive species are preferred.

Effects of Minor Components

Discussion of most products and processes is focused on the incorporation of 5 to 10 principal components of the sludge. However, the minor and trace components, particularly those still radioactive after several hundred years, are the most hazardous and generally the most difficult to immobilize.

Repository Requirements

Waste form specifications for a repository have not been determined. Consequently, product and process must have the flexibility to accommodate whatever designs, sizes, loadings, and temperature control that might be imposed by requirements of the repository. The repository requirements may impose a significant cost penalty on production, transporation, and storage of the waste forms.

ACKNOWLEDGMENT

H. O. Aaron of the Du Pont Engineering Department was consultant for derivation of conceptual processes for manufacturing the alternative waste forms.

BIBLIOGRAPHY

G. J. McCarthy, Ed. **Scientific Basis for Nuclear Waste Management.** Vol. 1, Plenum Press, New York (1979).

Proceedings of the Conference on High-Level Radioactive Solid Waste Forms, Denver, Colorado. December 19-21, 1978. USNRC Report NUREG/CP-0005, Nuclear Regulatory Commission, Washington, DC (1979).

Proceedings of International Symposium on Ceramics in Nuclear Waste Management, Cincinnati, Ohio. April 30 - May 2, 1979. (To be published.)

Solidification of High-Level Radioactive Wastes. Final Report, National Academy of Engineering, National Academy of Sciences. USNRC Report NUREG/CR-0895, Nuclear Regulatory Commission, Washington, DC (1979).

The Evaluation and Review of Alternative Waste Forms for Immobilization of High-Level Radioactive Wastes. Alternative Waste Form Peer Review Panel, L. L. Hench, Chm. USDOE Report DOE/TIC-10228 (1979).

L. L. Hench. "Alternative Forms for the Storage of Nuclear Waste." Hearings on Nuclear Waste Management, Subcommittee on Energy Research and Production, U. S. House of Representatives, May 16, 1979.

W. A. Ross, J. M. Rusin, and J. L. McElroy. "Processes for Production of Alternative Waste Forms." Presented at Symposium on Waste Management, Tucson, Arizona, February 1979. Proceedings to be published.

W. A. Ross, R. P. Turcotte, J. E. Mendel, and J. M. Rusin. "A Comparison of Glass and Crystalline Waste Materials." Presented at the International Symposium on Ceramics in Nuclear Waste Management, Cincinnati, Ohio, April 30 - May 2, 1979. Proceedings to be published.

Report to the President by the Interagency Review Group on Nuclear Waste Management. Report TID-29442, Washington, DC (1979).

Strategy Document, Long-Term High-Level Waste Technology Program. USDOE Report DOE/SR-WM-79-3, U.S. Department of Energy, Savannah River Operations Office, Aiken, SC (1979).

Immobilization of Defense High-Level Waste: An Assessment of Technological Strategies and Potential Regulatory Goals. USDOE Report SAND-79-0531, International Energy Associates, Ltd., Washington, DC (1979).

APPENDIX A1. BOROSILICATE GLASS (DWPF REFERENCE PROCESS)

Borosilicate glass is formed by heating a glass-frit/waste-calcine mixture at 1150°C. In the reference process, the molten glass is poured into cans 2 ft dia by 10 ft, filled to about 7.5 ft, to form monoliths that fracture extensively on cooling. Calcined waste is incorporated into the glass matrix with about 25 wt % loading on an equivalent oxide basis, or about 0.58 g/cm^3 waste density.

Borosilicate glass is being developed at the Savannah River Laboratory as the reference waste form for SRP waste. In addition to published work on borosilicate glass, information for Appendix A1 was obtained from extensive unpublished technical data summaries and design studies from SRL and Du Pont Engineering Department. J. A. Kelley, J. R. Wiley, and J. H. Warren of SRL provided further information.

Evaluation of Product

Leachability

At steady state, leachabilities are 10^{-7} to 10^{-8} g/(cm^2)(day) for ^{137}Cs, ^{90}Sr, and ^{239}Pu from glasses containing actual SRP waste, leached in distilled water. Leaching studies are underway with glasses containing simulated SRP waste, using various leachants, temperatures, and pressures.

Long-Term Stability

Borosilicate glass is expected to have good long-term stability. Even though glass is thermodynamically metastable, the rate of crystallization (devitrification) is very slow at 300°C; however, the amount of crystallization would be significant if the waste form were exposed to temperatures above 500°C for long periods. Such phase changes could cause volume changes and microcracking in the waste form. Tests have shown that radiation damage has negligible effect on the integrity of borosilicate glass containing SRP waste. Glasses are expected to accommodate transmutation very well. Hydrothermal reactions (with water at about 300°C and 300 atm) would be expected to alter borosilicate glasses significantly. Such high temperatures and pressures are not expected for typical repository conditions.

Thermal Properties

Thermal conductivity has not been measured for borosilicate glass containing SRP-type waste, but calculations predict a value of about 0.5 Btu/(hr)(ft)(°F) at 100°C, increasing to about 2.5 Btu/(hr)(ft)(°F) at 1150°C. Virtually no gases are evolved when borosilicate glass is heated.

Transportation Safety

The fire resistance of borosilicate glass should be excellent. The glass will not burn or emit gases to pressurize a canister. The waste form will have moderate friability and impact resistance, typical of most glasses. Compressive strengths of 50,000 to 100,000 psi are expected.

Evaluation of the Process

Process Description

A simplified flowsheet for solidication of SRP waste with borosilicate glass in the DWPF is shown in Figure A1.1. A slurry of the washed sludge, the cesium-loaded zeolite, and the strontium concentrate is calcined at 650°C. The calcined waste and borosilicate glass frit are fed into a continuous joule-heater melter operated at 1150°C, and the homogeneous molten glass is poured into a canister, 2 ft dia by 10 ft. Each canister contains 22 ft^3 or 3260 lb of glass. The cooled canister is sealed and decontaminated for interim onsite storage. About 1.8 filled canisters per day are produced.

Process Assumptions

The following bases are assumed for the borosilicate glass solidification step.

1) Waste composition of feed to the solidification step is given in Table 4.

2) Waste is dried (calcined) at 650°C to 2 wt % free water.

3) Chemical reactions assumed for calcination are as specified by SRL; composition of the calcine is shown in Table A1.1.

4) Glass formulation is 35 wt % waste (uncalcined solids and salts, on a dry basis) and 65 wt % borosilicate glass frit (Frit 21, with composition given in Table A1.2).

5) Chemical reactions assumed for melting at 1150°C are as specified by SRL; composition of waste in the glass product is shown in Table A1.1.

6) Density of the molten glass is 148 lb/ft^3.

7) Canister is 2 ft dia by 10 ft, filled with 165 gallons (22 ft^3) of molten glass.

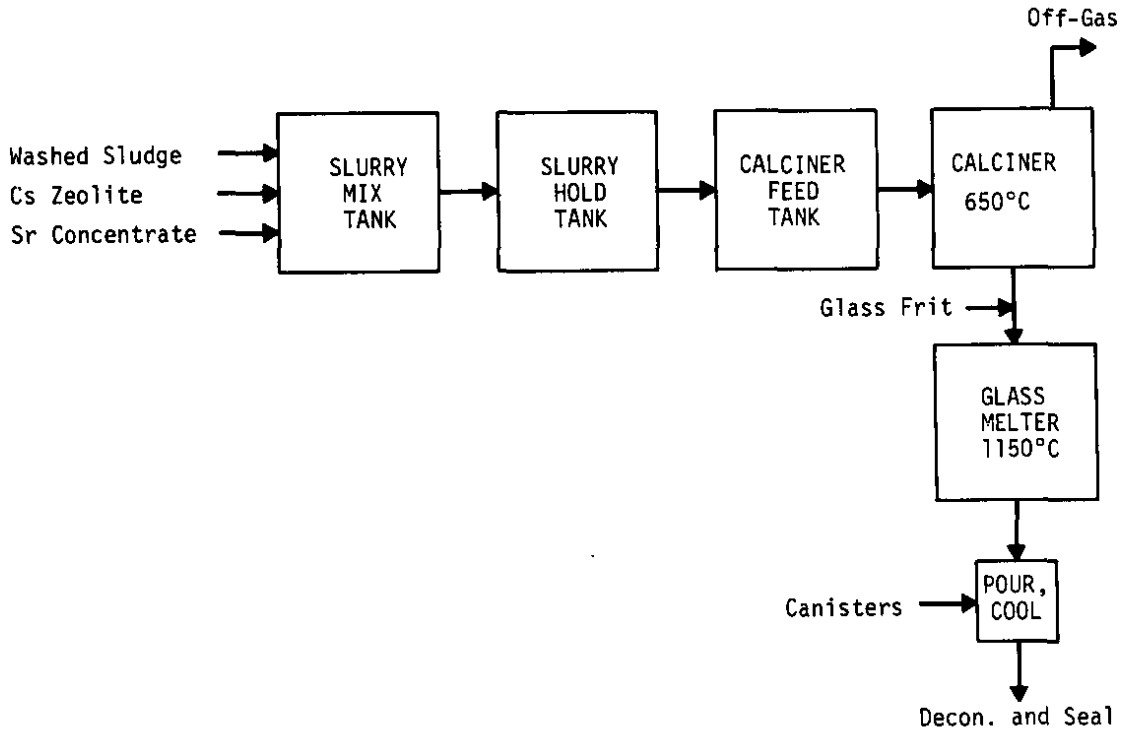

FIGURE A1.1. DWPF Reference Process for Borosilicate Glass

TABLE A1.1

Design Basis Compositions
of Calcine and Borosilicate Glass

	Flow Rate, lb/hr	
	Calcine	*Glass*
Salts		
$NaNO_3$	0.4256	-
$NaNO_2$	0.1647	-
$NaAlO_2$	0.1598	-
NaOH	2.812	-
Na_2SO_4	0.0924	-
	3.655	
Solids		
$NaNO_3$	1.431	
Fe_2O_3	30.01	30.00
Al_2O_3	6.088	6.187
MnO_2	8.470	8.470
U_3O_8	2.807	2.807
CaO	2.235	2.235
NiO	3.720	3.720
SiO_2	2.715	2.715
Na_2O	3.362	6.124
Na_2SO_4	0.772	0.865
Water of Hydration	10.18	-
Zeolite	6.295	6.295
	78.085	69.418
Water - Residual Moisture	1.668	-
Frit	-	178.4
Total	83.4	247.8

TABLE A1.2

Composition of Reference
Borosilicate Glass Frit 21

Component	*Wt %*
SiO_2	52.5
Na_2O	18.5
TiO_2	10.0
B_2O_3	10.0
CaO	5.0
Li_2O	4.0

Areas of Uncertainty

There are relatively few uncertainties in this process. Technology is similar to that used successfully in Europe, such as the French AVM process. Extensive laboratory studies with simulated and actual SRP waste have optimized formulations and process conditions. Studies with small-scale melters are underway, using both simulated and actual SRP waste. Some unanswered questions are outlined below. These uncertainties are not expected to have major impact on the operability of the process.

The degree of variability in waste composition fed to the solidification step is unknown. The composition could vary significantly from that shown in Table 4, and also change with time. The nature of such variations probably cannot be known until the waste solidification plant is actually operating. Nevertheless, the process is expected to be quite tolerant of changes in feed composition, because tests have shown that waste from all tanks sampled to date could be vitrified.

Some details of the chemical reactions that actually occur in the calciner and melter have not yet been determined. Off-gas composition, particularly for radionuclides, is uncertain. Detailed behavior of Ru, Cs, Hg, F, Cl, Na, B, I, Rb, Mo, Te, Tc, and Se, that may volatilize from actual SRP waste, is being studied.

Four potential problems with the melting operation have been identified: A slag may form at the bottom of the melter. A persistent foam may form at the melt/batch interface. A foam may form when the melter is heated after extended low-temperature idling (reboil). Melter electrodes may be destroyed by molten glass. Resolution of these uncertainties will improve the efficiency of the process.

Perhaps the greatest uncertainity is in the design of a full-scale calciner and melter for operation in a remote, shielded environment. The melter will be subjected to highly corrosive conditions, so that failure of electrodes and refractory liner is possible. Design to minimize failures and/or permit maintenance is essential. Extensive work is in progress to resolve all of these questions.

Complexity of the Process

Relatively few unit operations are required to produce borosilicate glass waste forms. This process operates at ambient pressure. Process complexity is moderate because of the need for temperatures up to 1150°C.

State of Development

The process is highly developed. Extensive laboratory-scale testing has been done with both simulated and actual SRP wastes. Extensive tests with a pilot-scale melter have been conducted with both simulated and actual waste. Nonradioactive tests with large-scale calciners and melters have been run at PNL. Conceptual engineering design studies are complete. Engineering development of prototype equipment has started. The borosilicate glass process for SRP waste is only 2 or 3 years away from practical implementation.

Quality Assurance

Quality is probably difficult to assure with large canisters of glass. A small fraction of the canisters might have to be sacrificed for core drillings. Alternatively, the output stream of molten glass might be sampled and tested periodically.

Yield and Recycle

The yield of the process should exceed 95%, because no important mechanisms for product loss during normal operation are known. Recycle of completed waste forms by remelting is feasible,

but with moderate difficulty. No equipment for subdividing the waste forms and adding the recycle glass to the melter has been provided in the reference design. Alternatively, the glass could be dissolved in HNO_3.

Process Safety

High temperatures and the presence of molten glass will require engineered safety features. Hypothetical incidents such as calciner breach, steam explosion in the melter, and a major glass spill have been identified. Consequences of such incidents to operating personnel and nearby population would be minor.

Compatibility with SRP Waste

Compatibility of borosilicate glass with SRP waste has been demonstrated repeatedly, with actual waste. Sulfate is the only constituent of SRP waste which is present in significant amounts that is not compatible with borosilicate glass. Most of the sulfate will be washed out before the solidification step. During melting, the waste interacts extensively with the borosilicate glass frit. However, small variations in waste composition will not have major impact of product quality. Because SRP waste has relatively low heat density, the canister centerline temperature from radioactive decay heat should be so low that it will have negligible effect on the product. The DWPF processes before and after solidification are compatible with borosilicate glass because they were designed specifically for the reference waste form.

Needs for Research, Development, and Scaleup Tests

Process and product research and development needs are relatively small and well defined. Further product characterization and small-scale hot tests with actual SRP waste are desirable. Engineering development and scaleup for remote operations must be demonstrated.

Bibliography

M. J. Plodinec. **Development of Glass Compositions for Immobilization of SRP Waste.** USDOE Report DP-1517, Savannah River Laboratory, E. I. du Pont de Nemours and Co., Aiken, SC (1979).

J. R. Wiley. "Preparations for High-Level Defense Waste Immobilization at Savannah River Plant." **Proceedings of the 1978 Johnson Conference of the American Society for Testing and Materials,** Johnson, Vermont, July 9-14, 1978 (in press).

APPENDIX A2. HIGH-SILICA GLASS (POROUS GLASS MATRIX PROCESS)

High-silica glass monoliths are formed by sintering an intimate mixture of porous-glass frit and waste calcine. High-silica glass has superior chemical durability, and the Porous Glass Matrix Process provides an avenue for fabricating high-silica waste forms at 1100°C, much lower than the 1800°C melting temperature. In addition, the waste form is protected by a thin layer of high-silica glass, prepared by collapsing a glass tube around the sintered core. The final form is a slender monolith, 8 ft high, with irregular flattened cross-section, resembling an elongated oval with dimensions 15 by 1 inch. Calcined waste is incorporated into the glass matrix with about 18 wt % loading on an equivalent oxide basis, or about 0.42 g/cm^3 waste density.

The Porous Glass Matrix Process is being developed at Catholic University of America (CUA). P. B. Macedo, T. A. Litovitz, and J. H. Simmons of CUA provided much of the information for Appendix A2.

Evaluation of Product

Leachability

Although leachability has not been determined for radionuclides, dissolution of the silica matrix has been measured, which is expected to approximate the leach rate of radionuclides. On this basis, a leachability of 5 x 10^{-10} g/(cm^2)(day) was reported for the sintered high-silica core. Leach tests were with samples containing simulated SRP waste; the tests followed leachability of cesium, as well as silica. With the protective glass layer around the core, radioisotope leachabilities would be expected to be about 10^{-12} g/(cm^2)(day). These are extraordinarily low leachabilities, and if achievable in practice, represent a significant improvement in glass technology for radioactive waste fixation. With more aggressive leachants, high-silica glasses are expected to behave generally like other glasses. No data are available for leaching of these glasses in brine.

Long-Term Stability

High-silica glass is expected to have excellent long-term stability. Even though glass is thermodynamically metastable, the rate of crystallization (devitrification) is very slow at 100°C; however, the amount of crystallization would be significant if the waste form were exposed to temperatures above 600°C for long periods.

Such phase changes would cause volume changes and micro-cracking in the waste form. Tests have shown that glasses accommodate radiation damage and transmutation very well. Hydrothermal reactions (with water at about 300°C and 300 atm) would be expected to alter high-silica glasses significantly, but no data are presently available.

Thermal Properties

Thermal conductivity has not been measured for high-silica glass containing SRP-type waste, but values of about 0.8 Btu/(hr)(ft)(°F) at 100°C would be expected. Thermal conductivity should increase slowly with temperature, but above 1000°C radiation rather than conduction will be the dominant heat transfer mechanism. No gases are expected to be evolved upon heating high-silica glass.

Transportation Safety

The fire resistance of high-silica monoliths is expected to be excellent. The glass will not burn or emit gases to pressurize a canister. By designing the glass cladding to have large surface compressive stress, the monoliths will have enhanced strength and resistance to breaking. The waste form should have low friability and good impact resistance.

Evaluation of the Process

Process Description

A conceptual flowsheet for solidification of SRP waste with high-silica glass in the DWPF is shown in Figure A2.1. A slurry of the washed sludge, the cesium-loaded zeolite, the strontium concentrate, and special porous-glass powder is calcined at 650°C. The calcined waste-porous glass mixture is loaded into a large glass tube with the lower end sealed. Each tube is 10 inches in diameter, about 9 feet high, and filled to 8 feet with approximately 4 ft^3 or 184 pounds of mix. The tube then is evacuated to a moderate vacuum and held vertically in a zone-heating furnace for heating from the bottom upward. Each horizontal zone is heated first to 600-900°C to collapse the pores of the glass grains, then to 900-1100°C to sinter the glass grains and incorporate waste solids, and finally to 1100-1300°C to collapse the outer tube around the sintered core. After the entire tube is

collapsed around the core, the top is sealed by collapsing the remaining unfilled section of the tube upon itself. The cooled monolith is decontaminated and packaged for interim onsite storage. For a 2-hour cycle time for sintering and tube collapsing, four furnaces would be required.

The key to this process is the use of porous glass powder, which promotes reaction with the waste and consolidation of the product at much lower process temperatures than would ordinarily be required for high-silica glass. The porous glass powder is produced by a special process that creates 0.01-μm pores in grains that are 10 to 300 μm in diameter. The porous glass powder probably can be purchased from a vendor at a price comparable to that of borosilicate glass frit. Alternatively, porous glass could be manufactured onsite in a cold feed preparation area.

Another unique feature of the Porous Glass Matrix Process is the tube collapsing operation. This step provides both added convenience in the process and added durability for the product.

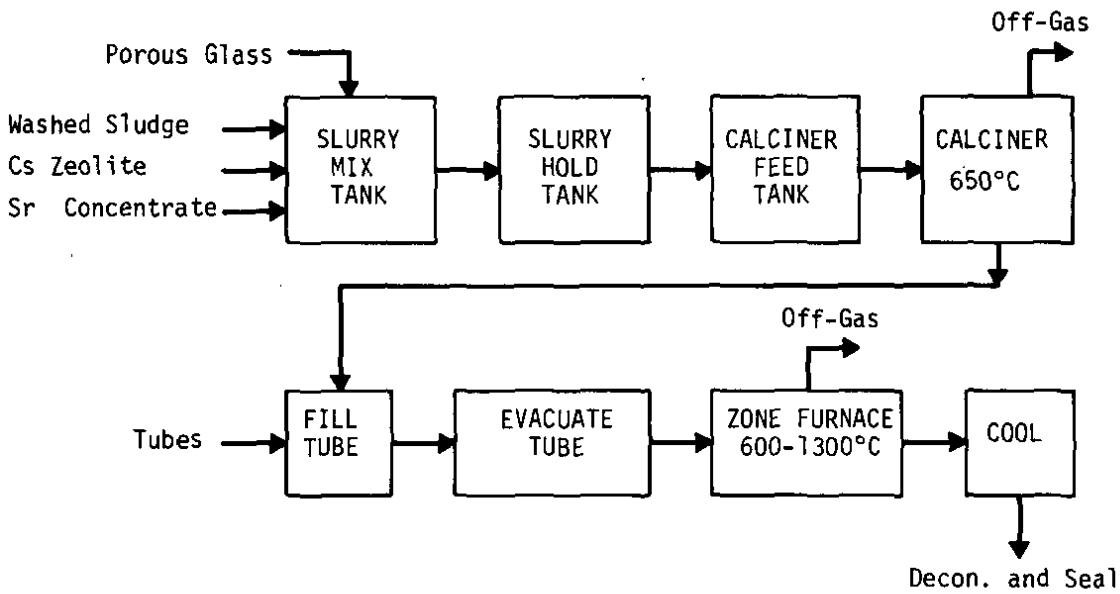

FIGURE A2.1. Porous Glass Matrix Process for High-Silica Glass

Process Assumptions

The following bases were assumed in developing the flowsheet for high-silica glass.

1) Waste composition is given in Table 4.

2) Glass formulation is specified by CUA: 20 wt % waste and 80 wt % porous glass powder; waste weight is calculated as sum of zeolite plus Na_2SO_4 plus other elements as oxides.

3) Slurry of waste and porous waste powder is calcined at 650°C.

4) Outer glass tube before collapsing is 10 inches in diameter with a 1/6-inch wall, and long enough to be filled to 8 feet.

5) Temperatures and times for sintering and tube collapsing are as specified by CUA. Cycle time is assumed to be 2 hours.

6) Volume reduction of core upon sintering is 70%.

7) Density of sintered high-silica glass waste form is 150 lb/ft^3.

Areas of Uncertainty

Most of the process conditions are not optimized and involve a large extrapolation from successful laboratory-scale operations. The principal areas of uncertainty are waste loading, a practical size for the monoliths, and the cycle time for sintering-collapsing operations. These quantities impact on the number of zone-heating stations required, and thus, on the amount of space occupied and on the cost of the process. Cycle time and collapsing temperature should be minimized; waste loading and monolith size should be maximized, but consistent with adequate product characteristics.

Some optimization of the glass composition may be needed. Additives in the porous glass might improve processing and product properties.

The behavior of volatile elements such as cesium and ruthenium is uncertain in this system at temperatures as high as 1300°C. CUA states that by heating the tube from the bottom upward, volatile species will be trapped in the pores of the cooler upper layers and will not be released when subsequently heated. If such behavior can be demonstrated, one of the disadvantages of high processing temperatures would be eliminated.

Zone heating of large glass monoliths in a remote, shielded environment has never been demonstrated for the manner envisioned for tube collapsing. However, somewhat similar operations are highly developed for the British HARVEST process and for the PNL in-can glass-melting process. Experience with these other processes suggests that development of a suitable zone-heating system is feasible. CUA also has proposed that a novel method of heating, with lasers, be explored.

Complexity of the Process

Relatively few unit operations are required to produce high-silica glass waste forms. High pressures are not needed, but vacuum of about 1 torr is used. Process complexity is moderate because of the need for temperatures up to 1300°C.

State of Development

The process is in a very early stage of development. Laboratory tests at CUA showed a desirable product could be obtained, but further laboratory-scale optimization needs to be done. Tests with simulated SRP waste are underway; the product has not yet been characterized extensively. No radioactive tests with actual SRP waste have been run, and engineering development has not yet started. The Porous Glass Matrix Process is at least 5 years away from practical implementation.

Quality Assurance

Quality is probably difficult to assure with large glass monoliths. Visual and instrumental inspection would be needed. A small fraction of the monoliths would have to be sacrificed for core drillings.

Yield and Recycle

The yield of the process should exceed 95%. No important mechanisms for product loss during normal operation are known. Recycle of completed monoliths is feasible, but with moderate difficulty. Equipment for crushing the glass and adding the recycle powder to the slurry mix tank must be provided.

Process Safety

The only unusual safety concern with this process is with handling large thin-walled glass tubes, which might break. High temperatures used in the process will require normal safety precautions.

Compatibility with SRP Waste

Glasses generally are compatible with the oxides found in calcined SRP waste. Excessive sulfate might be detrimental to the quality of high-silica glass; most of the sulfate in SRP waste will be washed out before the solidification step. CUA has demonstrated that high-silica glass is compatible with simulated SRP waste, when prepared by the Porous Glass Matrix Process. Extensive interaction of the waste with the porous glass powder is expected during sintering. However, small variations in waste composition should not have major impact on product quality. Because SRP waste has relatively low heat density, and the monoliths have a thin cross-section, centerline temperatures will be only a few degrees above the surface temperature. Expected temperatures would have negligible effect on the product.

The DWPF processes prior to solidification are suitable for input to the process for high-silica glass. Benefits of the aluminum dissolving step are uncertain, except for reducing the amount of sludge to be solidified. Washed sludge, zeolite, and strontium concentrate, when calcined, are in a physical form compatible with the Porous Glass Matrix Process. Soluble components are trapped in the pores, and the solid particles become intimately mixed with the glass grains. Because the process produces irregularly-shaped monoliths, the mechanical and packaging operations would differ significantly from the reference DWPF design.

Needs for Research, Development, and Scaleup Tests

Extensive process and product research and development are needed. Laboratory tests include optimization of formulation, waste loading, and process conditions. Extensive product characterization is needed. Small-scale radioactive tests with actual SRP waste are needed under optimized process conditions. Engineering development and scaleup for remote operations must be demonstrated.

Bibliography

J. H. Simmons, P. B. Macedo, A. Barkatt, and T. A. Litovitz. "Fixation of Radioactive Waste in High-Silica Glasses." **Nature 278**, 729 (1979).

APPENDIX A3. CONCRETE (FUETAP PROCESS)

Concrete monoliths are formed under elevated temperature and pressure (FUETAP), in cans 2 feet in diameter by 10 feet, filled to 8 feet. The waste form is produced under relatively mild conditions (150°C and 100 psi) and contains very little free water. Dried waste is incorporated into the concrete matrix with about 12 wt % loading on an equivalent oxide basis, or about 0.18 g/cm^3 waste density.

The FUETAP concrete waste form is being developed by ORNL, with formulations based on experience with hydrofracture grouts. J. G. Moore of ORNL provided most of the information for Appendix A3.

Evaluation of Product

Leachability

For ^{137}Cs, in distilled or spring water, leachability is about 10^{-6} g/(cm^2)(day); in brine, about 10^{-5} g/(cm^2)(day). For ^{90}Sr, in distilled or spring water, leachability is about 10^{-4} g/(cm^2)(day); in brine, about threefold greater. For ^{239}Pu, in spring water, leachability is less than 10^{-8} g/(cm^2)(day). Special clay additives in the formulation with cement and waste fix cesium and produce unusually low leachabilities for ^{137}Cs. Plutonium leachability is very low, as it is in all concretes, and strontium leachability is better than for hydrofracture grouts. Long-term leaching has been demonstrated to occur primarily by diffusion, with effective diffusivities of 10^{-15} cm^2/sec for ^{137}Cs, 10^{-11} cm^2/sec for ^{90}Sr, and less than 10^{-19} cm^2/sec for ^{239}Pu.

Long-Term Stability

In general, concretes have long-term structural stability to heat (but only up to 400°C) and to radiation. Transmutation effects are expected to be minimal. Long-term radiolysis of residual water in concrete might generate undesirable amounts of hydrogen and oxygen. ORNL has shown that FUETAP concrete has a catalytic effect for recombination of radiolytic gases, and experiments to characterize the catalytic effect are underway.

Thermal Properties

Thermal conductivity is about 0.3 Btu/(hr)(ft)(°F), typical of dry concretes. Evolution of water above 100°C is minimal

because of a dewatering step in the production process. Loss of water of hydration, and thus of cementitious properties, is expected at some temperature above 450°C.

Transportation Safety

The fire resistance of a concrete monolith in a canister is moderate. Although the concrete waste form will not burn, evolution of water as steam will pressurize the canister. Steam pressurization by FUETAP concrete is expected to be lower than for ordinary concretes, because little free water is present. In a transportation accident, the friability of the waste form is related to the potential for airborne release of radioactivity as small particles. FUETAP concrete is expected to have low tensile strength (200 to 400 psi) and moderate to poor impact resistance, typical of most concretes. Compressive strength of 2,000 to 4,000 psi is expected.

Evaluation of the Process

Process Description

A conceptual flowsheet for solidification of SRP waste with FUETAP concrete in the DWPF is shown in Figure A3.1. A slurry of the washed sludge, the cesium-loaded zeolite, and the strontium concentrate is dried at 105°C; the dried waste is mixed with cement and other dry additives, according to a formulation, in a batch mixer; then, a measured amount of water is added, the batch is mixed, and the paste is cast in a canister 2 feet in diameter by 10 feet. Each canister contains 23 ft^3 or 2540 lb of the mix. The canister is closed, heated to 150°C, pressurized to 100 psi for 24 hours, vented, heated to 250°C for 48 hours, cooled, sealed, and decontaminated for interim onsite storage.

The unique feature of this process is the curing step at elevated temperature and pressure. This step is the key to production of high quality concrete in a relatively short time. A secondary feature of the process is the venting step to evaporate excess water; water removal minimizes the possibility of subsequent steam pressurization or radiolytic generation of gases.

Process Assumptions

The following bases were assumed in developing the flowsheet for FUETAP concrete (Figure A3.1):

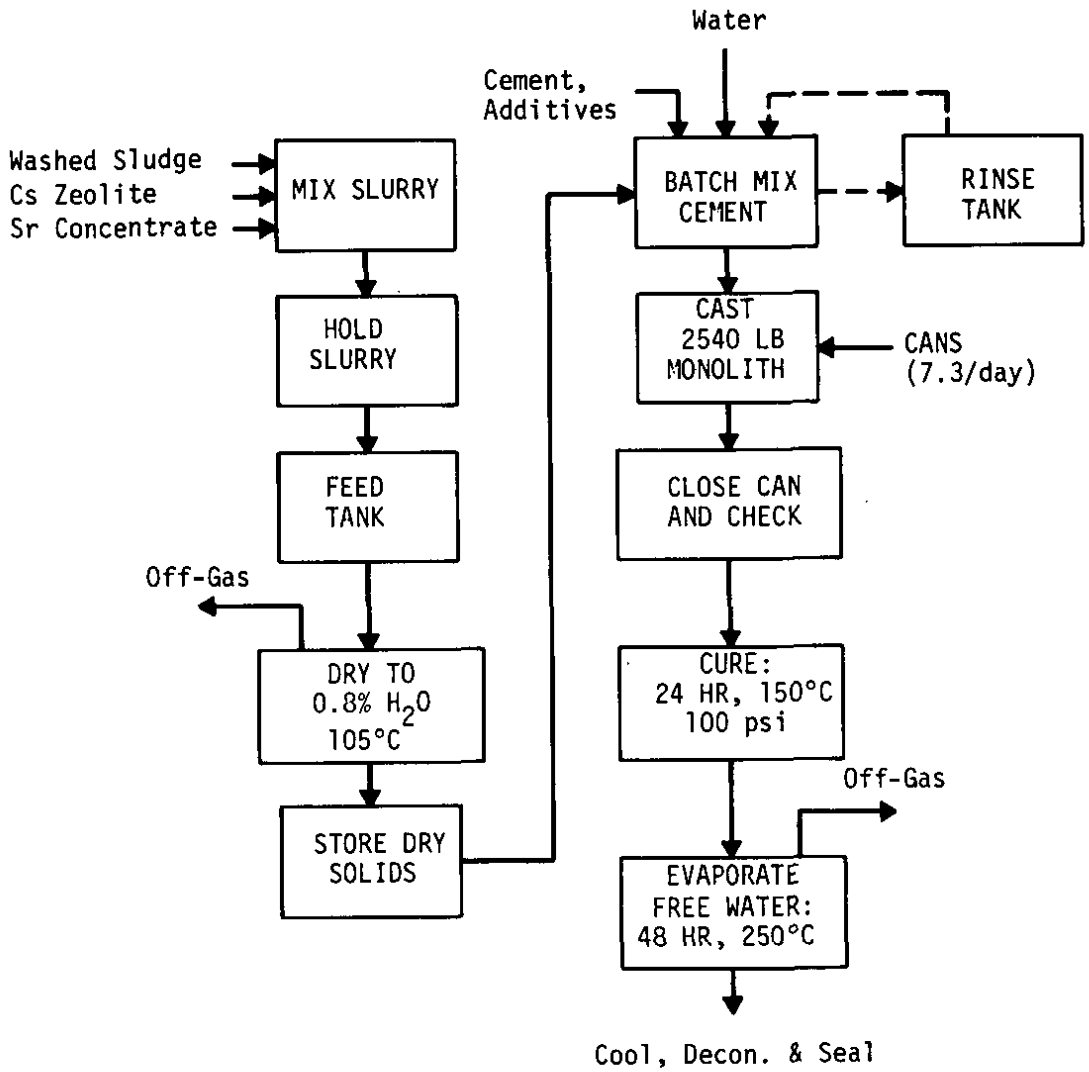

FIGURE A3.1. FUETAP Concrete Process

1) Waste composition is given in Table 4, except that aluminum is about three times greater than shown because the aluminum dissolving step is omitted from the sludge pretreatment.

2) Waste is dried to 0.8% moisture.

3) Concrete formulation is specified by ORNL (Mix 4), except that content of dried, hydrated waste is 15 wt % instead of 10%, as shown in Table A3.1.

4) Density of paste and cured monolith (before dewatering) is 110 lb/ft^3.

5) Canister is same size as for reference glass process, filled with 23 ft^3 of paste. The neck of the canister and associated attachments occupy the top 12 inches.

6) Temperatures, pressures, and cycle times for curing and dewatering are as specified by ORNL.

7) 50% of total mix water is evaporable from the cured monolith.

TABLE A3.1

FUETAP Concrete Formulation

Component	*Wt %*
Cement	26.8
Fly Ash	21.9
Clay	8.7
Suspending Agent	0.4
Waste (hydrated)	15.0
Water	27.2

Areas of Uncertainty

Some of the process conditions are uncertain or are not yet optimzied, although there is little doubt that a reasonable product could be obtained with the stated conditions. The principal areas of uncertainty are the curing-dewatering cycle time, the mix density, and the waste loading. These quantities impact on the number of heating stations required, and thus, on the amount of space occupied and on the cost of the process. Cycle time, curing temperature, and curing pressure should be minimized; density and waste loading should be maximized, but consistent with adequate product characteristics. Recent studies at ORNL indicate that waste loading of 20 wt % may be feasible.

Removal of aluminum from the waste sludge is not necessary for the concrete waste form. However, certain benefits would accrue from retaining the aluminum dissolving step; with less waste to solidify, fewer canisters and fewer heating stations would be needed.

The final concrete formulation is uncertain; recent studies at ORNL have found formulations superior to Mix 4. The best type of cement is not yet known. Fly ash is added to improve cementitious properties and help retain strontium; the cement/fly ash ratio probably is not optimum in Mix 4. An illitic clay additive gives good cesium retention; however, the need for both clay and zeolite in the mix has not been established. Other additives such as a suspending agent and a set retarder need to be studied. The suspending agent may not be needed. The amount of water used is believed to be critically important in obtaining a high-quality product. A water-reducer additive might improve the formulation.

The amount of water that will be released in the dewatering step also is uncertain. ORNL has shown that this water loss depends on nitrate content and cement type, as well as on time and temperature. Presumably, the canister would be designed with a porous sleeve or a number of porous pipes extending from top to bottom of the canister, to provide a short path for water evaporation throughout the casting.

Batch cement mixing and casting have never been demonstrated in a remote, shielded environment. Because several of the operations involve dry powders, the process will be dusty.

Complexity of the Process

Unit operations in the FUETAP process are relatively simple. The process requires only simple drying and mixing operations, and relatively low temperatures and pressures. Lack of complexity is one of the chief virtues of the process.

State of Development

The process is in a very early stage of development. However, the unit operations are similar to those used in large-scale commercial production of steam-cured concrete objects such as cinder blocks. Laboratory scouting tests at ORNL showed that the process is feasible, and laboratory-scale optimization is underway. Tests with simulated SRP waste are underway, but radioactive tests with actual SRP waste have not been run. Engineering development has not yet started, although a preliminary engineering and economic analysis (for commercial waste) is available. The FUETAP process is at least 5 years away from practical implementation.

Quality Assurance

Quality assurance with large concrete monoliths may be difficult. Analysis of core drillings from a small fraction of the monoliths is feasible, but possibly would sacrifice those castings. Alternatively, a small sample of paste from each batch could be tested.

Yield and Recycle

The yield of the process is expected to exceed 95%. The principal losses would occur with paste that clings to the mixer. Provision is made for rinsing the mixer after each batch and recycling the rinse water. Recycle of completed monoliths is feasible, but with moderate difficulty. Equipment for removing the concrete from the canister, crushing the concrete to a powder, and adding the recycle powder to the dry mix must be provided.

Process Safety

The process has no unusual safety problems, other than the need to handle dry, dusty powders.

Compatibility with SRP Waste

Concretes generally are compatible with most salts and hydrous oxides, such as are found in SRP waste. Little chemical interaction is expected between SRP waste and FUETAP concrete. Waste is incorporated by intimate mixing of waste particles with the cementitious crystallites of the concrete. Because SRP waste has relatively low heat density, centerline temperatures of the monoliths are expected to be well below 400°C, where concrete loses structural integrity.

The DWPF processes prior to solidification are suitable for input to the FUETAP process, with or without aluminum dissolving. Washed sludge, zeolite, and strontium concentrate, when dried, are in a physical form compatible with concrete. Product canisters are the same size as in the reference DWPF design.

Needs for Research, Development, and Scaleup Tests

Extensive process and product research and development are needed. Laboratory tests include further optimization of formulation, mix density, waste loading, and curing-dewatering cycle time. Behavior of evaporable water should be determined. Radiolysis effects must be established. Extensive product characterization is needed. Small-scale hot tests with actual SRP waste should be conducted with the optimized process conditions. Engineering development and scaleup for remote operation must be demonstrated.

Bibliography

J. G. Moore, E. Newman, and G. C. Rogers. "Radioactive Waste Fixation in FUETAP (Formed Under Elevated Temperature and Pressure) Concretes - Experimental Program and Initial Results." USDOE Report ORNL/TM-6573, Oak Ridge National Laboratory, Oak Ridge, TN (1979.)

H. O. Weeren and J. J. Perona. "A Preliminary Engineering and Economic Analysis of the Fixation of High-Level Wastes in Concrete." USDOE Report ORNL/TM-6863, Oak Ridge National Laboratory, Oak Ridge, TN (1979).

APPENDIX A4. HOT-PRESSED CONCRETE

Dense concrete monoliths are formed by hot-pressing at 150 to 250°C and 25,000 to 50,000 psi. Minimum water is used in the formulation, and the product contains very little free water. Practical sizes for the monoliths have not been determined, but in the following discussion a monolith sized to fit in the reference-design canister is assumed. For this example, the canister is 2 feet in diameter by 10 feet, filled to 8 feet; a monolith of this diameter would require a 10,000-ton press. Dried waste is incorporated into the concrete matrix with about 25 wt % loading on an equivalent oxide basis, or about 0.73 g/cm^3 waste density.

Hot-pressed concrete for radioactive waste was developed at Pennsylvania State University (PSU). D. M. Roy and B. E. Scheetz of PSU provided part of the information for Appendix A4.

Evaluation of Product

Leachability

Leachability was not determined for radionuclides. However, the permeability of hot-pressed concrete is 1,000 to 100,000 times smaller than that of ordinary concretes. The reduced permeability would be expected to reduce leachability by a factor of 10 to 100. Extrapolating from data with ordinary concrete in distilled water, leachabilities for ^{137}Cs of about 10^{-5}, for ^{90}Sr of about 10^{-7}, and for ^{239}Pu of about 10^{-10} $g/(cm^2)(day)$ would be expected. The possibility of further improving ^{137}Cs leachability by use of cesium-retaining additives should be explored.

Long-Term Stability

Hot-pressed concrete is expected to have superior long-term structural stability to heat (up to 760°C) and to radiation. Transmutation effects should be minimal. Thermal stability tests showed that this dense concrete could survive much higher temperature than ordinary concrete. Long-term radiolysis of water in the concrete to produce hydrogen is minimized by preparing the waste form without excess water.

Thermal Properties

Thermal conductivity has not been measured for hot-pressed concrete containing SRP-type waste, but values in the range 0.6-1.0 Btu/(hr)(ft)(°F) would be expected. Evolution of water above 100°C should be minimal because little or no excess water is used in the production process. Tests indicate that loss of water of hydration, and thus, of cementitious properties, does not occur below 760°C.

Transportation Safety

The fire resistance of a dense concrete monolith in a canister is expected to be good. The concrete waste form will not burn, and steam pressurization should be minimal because little free water is present. The dense concrete should have moderate to low friability and good impact resistance. Tensile strengths are 5 to 10 times higher than for ordinary concretes. Compressive strength is unusually high for concrete, about 20,000 psi.

Evaluation of the Process

Process Description

A conceptual flowsheet for solidification of SRP waste with hot-pressed concrete in the DWPF is shown in Figure A4.1. A slurry of the washed sludge, the cesium-loaded zeolite, and the strontium concentrate is dried at 105°C; the dried waste is mixed with cement and a measured amount of water in a batch mixer, and the mix is transferred to the lubricated die of a hot-press. The wet mix is pressed to 25,000 to 50,000 psi at ambient temperature. Then, the compact is heated to 150 to 250°C, under pressure. The waste form is held at the designated temperature and pressure for one hour, then cooled under pressure. The cooled monolith is forced out of the die into a canister, which is then sealed and decontaminated for interim onsite storage. 24-hour cycle times are projected for the hot-pressing operation. A 10,000-ton press will be required for this operation. Ability to hot-press large monoliths of dense concrete in a remote shielded area is the key to this process.

Process Assumptions

The following bases were assumed in developing the flowsheet for hot-pressed concrete (Figure A4.1).

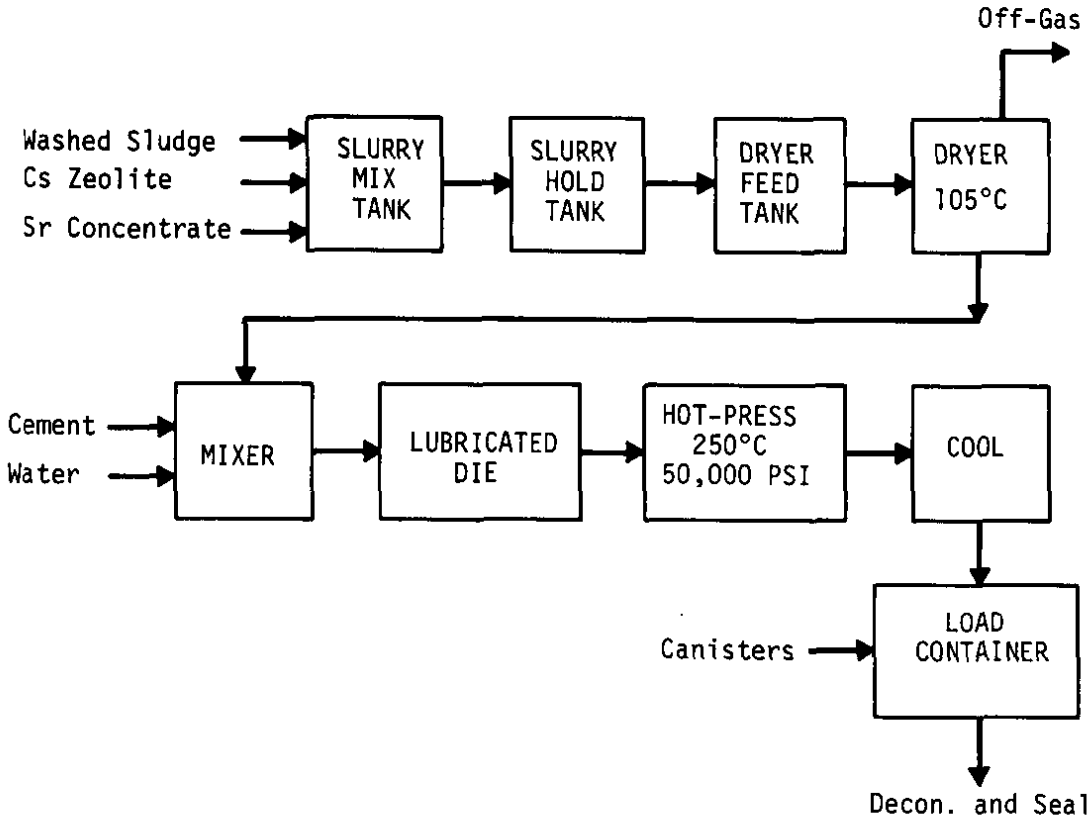

FIGURE A4.1. Hot-Pressed Concrete Process

1) Waste composition is given in Table 4, except that aluminum is about three times greater than shown because the aluminum dissolving step is omitted from the sludge pretreatment.

2) Waste is dried to 0.8% moisture.

3) Concrete formulation is specified by PSU: dry solids are 40 wt % hydrated waste and 60 wt % cement (Fondu high-alumina cement); water/cement ratio is 0.1, including water of hydration.

4) Temperature, pressure, and hold time for hot-pressing are as specified by PSU. Cycle time is assumed to be 24 hours.

5) Density of the hot-pressed waste form is 175 lb/ft^3.

6) Canister is same size as for reference glass process, containing an 8-foot-long monolith.

Areas of Uncertainty

Most of the process conditions are not optimized and involve a large extrapolation from successful laboratory-scale operations. The principal areas of uncertainty are a practical size for the monoliths and the cycle time for the hot-pressing operation. These quantities impact on the number of presses required, and thus, on the amount of space occupied and on the cost of the process. Cycle time, temperature, and pressure should be minimized; monolith size should be maximized, but consistent with adequate product characteristics.

Removal of aluminum from the waste sludge is not necessary for concrete waste forms. However, if the aluminum dissolving step were retained, less waste would be solidified, and fewer canisters would be needed. A minimum of two presses still would be required.

The final concrete formulation is uncertain. The best type of cement is not yet known, although several candidates have been investigated. The relative amounts of cement, waste, and water may have to be adjusted to give an optimum mix with SRP waste. An additive may be needed to improve cesium retention.

Hot-pressing large monoliths in a remote, shielded environment has never been demonstrated. Equipment necessary for this operation has not been developed. Hydraulic presses with 10,000-ton capacity have been built for industrial work, but are not common. Whether such equipment could be adapted for remote operation and maintenance is unknown.

Because several of the operations involve dry powders, the process will be dusty. A method of water addition to the dry cement-waste mixture would have to be developed to ensure uniform distribution of the water during hot-pressing.

Complexity of the Process

Relatively few unit operations are required to produce hot-pressed concrete, and the temperature required is relatively low. The process is moderately complex because high pressures are used.

State of Development

The process is in a very early stage of development. Laboratory tests at PSU showed a desirable product could be obtained, but further laboratory-scale optimization needs to be done. Simulated SRP waste has not been incorporated into hot-pressed

concrete. Characterization of cold products is needed before tests with actual SRP waste are run. Extensive engineering development is needed on large, remotely-operated hot presses. Because of these development uncertainties, a practical process for hot-pressed concrete could be more than 10 years away from implementation.

Quality Assurance

Quality assurance with large concrete monoliths may be difficult. A small fraction of the monoliths would have to be sacrificed for core drillings.

Yield and Recycle

The yield of the process should exceed 95%. The principal losses would occur with a small amount of mix that creeps up the press ram. Recycle of completed monoliths is feasible, but with moderate difficulty. Equipment for crushing the concrete and adding the recycle powder to the dry mix must be provided.

Process Safety

The only unusual safety concern with this process is with the use of high pressures. Dies could fracture with explosive force, so that provision for safe dissipation of released energy must be designed into the high-pressure equipment.

Compatibility with SRP Waste

Concretes generally are compatible with most salts and hydrous oxides, such as are found in SRP waste. Little chemical interaction is expected between SRP waste and the cement in hot-pressed concrete. Waste is incorporated by intimate mixing of waste particles with the cementitious crystallites of the concrete. Because SRP waste has relatively low heat density, centerline temperatures of the monoliths are expected to be well below 400°C and to present no problem for the structural integrity of the concrete.

The DWPF processes prior to solidification are suitable for input to the process for hot-pressed concrete, with or without aluminum dissolving. Washed sludge, zeolite, and Sr concentrate, when dried, are in a physical form compatible with hot-pressed concrete. For the example shown in Figure A4.1, product canisters are the same size as in the reference DWPF design.

Needs for Research, Development, and Scaleup Tests

Extensive process and product research and development are needed. PSU is pursuing further development of the hot-pressed concrete waste form. Laboratory tests are needed to optimize the formulation and hot-press conditions. Steam generation and radiolysis effects must be established. Extensive product characterization is needed. Small-scale hot tests with actual SRP waste should be conducted with the optimized process conditions. Engineering development and scaleup for remote operation, especially with large presses, must be demonstrated.

Bibliography

D. M. Roy and G. R. Gouda. "High-Level Radioactive Waste Incorporation into (Special) Cements." **Nucl. Tech.** 40, 214 (1978).

D. M. Roy and G. R. Gouda. "Hot Pressed Cement in Radioactive Waste Management." Final Report to Nuclear Waste Technology Program, Subcontract BSA-841, Battelle Pacific Northwest Laboratories. Materials Research Laboratory, Pennsylvania State University, University Park, PA (1974).

APPENDIX A5. SUPERCALCINE CERAMIC

Supercalcine ceramic is a densely consolidated ceramic body composed of several distinct, stable, and mutually compatible mineral-like oxide phases. Supercalcine is formed by tailored additions of Al_2O_3, SiO_2, CaO, and perhaps other oxides to SRP waste. The components of SRP sludge are incorporated into stable silicate-based crystalline phases in a ceramic with nearly full density. Practical sizes for the ceramic bodies have not been determined, but in the following discussion a monolith, 2 feet in diameter by 4 feet long, in a metal canister is assumed. Supercalcine ceramic may have up to 95 wt % waste loading on an equivalent oxide basis, or about 4 g/cm^3 waste density.

The supercalcine concept was developed at Pennsylvania State University (PSU). G. J. McCarthy and R. Roy of PSU provided part of the information for Appendix A5. Development is continuing by Rockwell International, Energy Systems Group and Science Center, under contract to DOE.

Evaluation of Product

Leachability

Although leaching has not been tested on supercalcine containing SRP-type waste, supercalcine ceramic is expected to have lower leachability than borosilicate glass (based on the leachability of cesium from pollucite, one of the phases in supercalcine). Leach resistance under hydrothermal conditions is expected to be superior to that of borosilicate glass. A small- scale leach test on a supercalcine pellet containing simulated commercial waste showed that the leach rate for Cs in deionized water at 300°C and 300 atm was about 10 times lower than for borosilicate glass. Leach rates in brine were about the same for supercalcine and glass. Ceramic systems may give the lowest achievable long-term leachability for SRP sludge, because analogs of the mineral-like phases have survived in nature for millions of years.

If the desired microstructure can be achieved in practice, the supercalcine phase assemblage will offer both mechanical and chemical protection from leaching because of high density and low surface-to-volume ratio. However, selective leaching at high-energy grain boundaries, microcracks caused by inclusions, or impurities on grain boundaries might limit attainment of low leachability.

Long-Term Stability

The long-term stability of monolithic supercalcine ceramic is expected to be excellent because of the thermodynamic stability of the mineral-like phases and their compatibility with the geology of the repository. Valence changes, volume changes, and radiation damage as radionuclides decay could reduce the chemical stability of the phases and the structural integrity of the monolith by increasing friability and leachability. No radiolysis effects are anticipated.

Thermal Properties

The melting temperatures of the component phases and associated eutectics are nearly all over 1000°C. The thermal conductivity of the form is expected to be typical of most oxide compositions, about 1 Btu/(hr)(ft)(°F).

Transportation Safety

A supercalcine ceramic waste form would be expected to have excellent fire resistance because of its refractory and nonoxidizable properties. The ceramic probably will have high strength and impact resistance. Fines generation in a transportation accident is expected to be low.

Evaluation of the Process

Process Description

A conceptual flowsheet for the manufacturing process (Figure A5.1) involves admixing a slurry of finely divided or soluble aluminum salt, calcium salt, and SiO_2 into the sludge slurry; spray drying at 600 to 800°C to remove nitrate and most of the water; cold compacting at 50,000 psi to about 50% of full density into a primary container perhaps made of nickel; vacuum degassing at about 1000°C; and then hot isostatic compaction at 1100-1300°C and 50,000 psi to form a clad monolith with full density. The cooled waste form is packaged for interim onsite storage.

Process Assumptions

The following bases were assumed in developing the flowsheet for supercalcine ceramic:

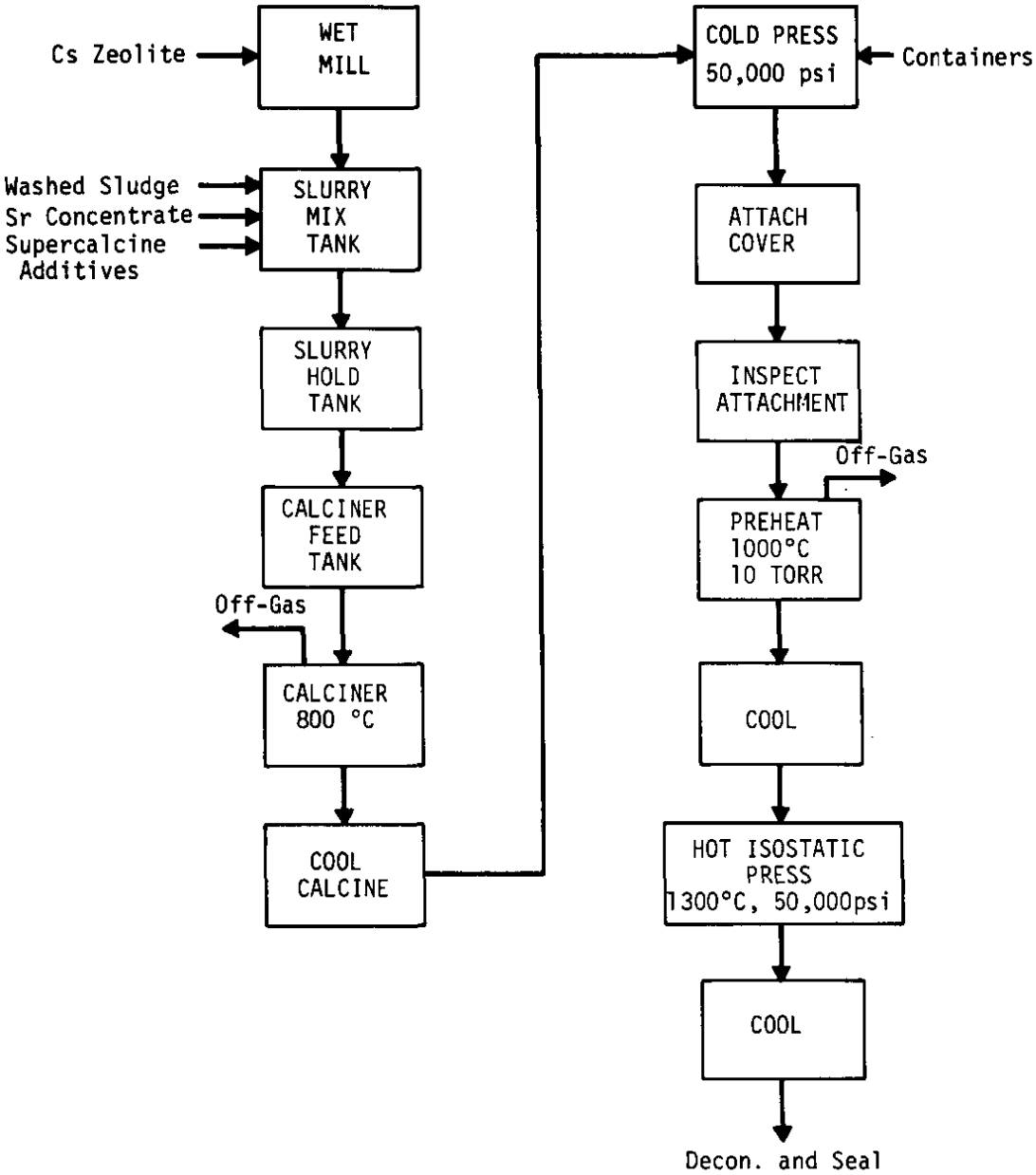

FIGURE A5.1. Supercalcine Ceramic Process

1) Sludge loading is 90 to 95 wt %, assuming that the sludge already contains most of the desired supercalcine components.

2) The fabrication process and conditions are generally as specified by PSU.

3) Sludge compositions will vary from batch to batch, over a period of several months, so that the supercalcine additives will be tailored from an analysis of each sludge batch.

4) No aluminum dissolution is required, because Al_2O_3 is one of the principal components of supercalcine.

5) Sludge will be washed to remove soluble salts. Residual sodium will be incorporated in supercalcine as nepheline.

Areas of Uncertainty

Realization of the potential promised by this form is uncertain. The ability of the process to permit radionuclides to find their intended host in the complex multiphase assemblage must be demonstrated. Methods of producing high density with closed porosity (>95% theoretical density) must be developed for large monoliths. The variable chemical and physical characteristics in SRP sludge could also compromise product quality.

The anticipated low leachability might not be attained because of: (1) fabrication difficulties in a remotely operated complex process, (2) slow kinetics of subsolidus consolidation to full density, (3) the large variability among the more than 40 components in different SRP sludges, (4) the possibility that some of the radionuclides might not be incorporated into the proper phases because of kinetics or might not form refractory phases at all, and (5) coarse coal, sand, and zeolite in SRP waste.

Cold compaction to obtain an integral compact (>50% of full density) may be difficult for large monoliths. A smaller product with high aspect ratio may be desirable.

Because the process is undemonstrated, but generally feasible, all process conditions are uncertain and must be determined. The process described is only one of many options.

Process conditions for consolidation of the waste form in a canister by hot isostatic compaction are unknown. The feasibility of remote isostatic pressing has been assumed based on technology being developed in Sweden.

The radioactive dust occluded in the metal cladding when the cladding collapses in the hot isostatic press may not be easily decontaminated for subsequent handling in clean cells.

Complexity of the Process

As shown in Figure A5.1, a large number of operations are required to produce the supercalcine ceramic waste form, indicating high complexity. The process may require such tight control of particle size, scale of mixing, compact density, and isostatic compaction temperature and pressure, that yield and flexibility are compromised significantly. Particles of supercalcine additives and sludge are expected to require mixing on a 10 μm scale or smaller, to ensure complete phase formation. For example, the isostatic compaction temperatures may have to be high enough to get consolidation to full density (say, above 1100°C), but low enough to avoid eutectic melting (1100 to 1300°C). The particle sizes and compositions of SRP waste are expected to vary, requiring the composition of the supercalcine additives and the consolidation conditions to be varied accordingly. The degassing step at 1000°C may vaporize Cs, I_2, Ru, Sb, and Te and thus requires a sophisticated off-gas system. The off-gassing of volatile constituents should be tolerable for isostatic compaction in a metal can. Large, remotely operated isostatic presses and milling equipment are difficult to operate and maintain in a shielded facility. With some minor process modifications, hot isostatic pressing could be done in a contact-maintenance facility.

State of Development

No experimental work has been done adapting the supercalcine concept to SRP defense waste. The chemical composition of SRP waste is expected to be well suited for supercalcine ceramic forms. Very high waste loadings are expected to be achievable for SRP waste. Fabrication technology, hydrothermal leaching performance, or characterization data are not available on monolithic-scale forms even with simulated waste. Compaction on this scale with isostatic presses has been done in other industries, and Swedish technology for compacting waste powders is fully applicable to this process. However, large scale technology for the controlled phase formation required in the supercalcine-ceramic process has not been demonstrated.

Laboratory-scale tests at PSU with simulated commercial waste have defined a set of desirable compatible mineral-like phases that are formed when selected concentrations of silica, alumina, and calcia are admixed. Small-scale tests at PNL using simulated commercial waste have shown limited success. Eutectic melting at 1150°C was required to produce high-density ceramic by pressureless sintering.

Quality Assurance

Quality assurance of the large solid monoliths will be very difficult. Techniques will be required to test the massive monolith for completeness of phase formation.

Yield and Recycle

The yield of the process is expected to exceed 95%. Recycle of this product would be difficult. Decladding, crushing, and comminution equipment is required.

Process Safety

The consolidation process (and recycle of reject monoliths) involves handling typically 1- to 5-μm powders, which will present problems for safety, equipment maintenance, off-gas systems, and filtration of ventilation. Substantial amounts of submicron powders (<0.3 μm) would be expected to penetrate and plug ventilation filters. Residual radioactive dust on equipment accelerates rusting, corrosion, and failure of organic gaskets and seals. Decontamination of the clad monolith after 25% linear reduction during compaction may prove difficult. Occluded activity subsequently could be released in clean areas.

Compatibility with SRP Waste

The process is compatible with the bulk of the SRP waste. Chemically, the SRP waste compositions are particularly well suited for supercalcine compositions. Very high loadings are possible, and aluminum removal is not required. Even soluble salts may be accommodated by the supercalcine process. However, this process might not accommodate the appreciable amount of diverse contaminated waste that probably would be present at the end of the production campaign.

SRP waste in the DWPF will contain coarse coal, sand, and zeolite. These materials have particle sizes between 400 and 900 μm. Formation of supercalcine phases may be hindered with such coarse material. Mixing must be on a <10-μm scale. Consequently, wet-milling may be required, or these materials must be treated separately as a different, special form. Coal particles in SRP waste may be too coarse to be burned by calcining. Some coal may be helpful in retarding the volatility of Ru, Tc, and Mo (but will aggravate Cs volatility). However, residual coal would be expected to affect the integrity of the monolith, reduce iron oxide and nickel oxide to metal, and cause porosity as CO_2 gas.

Needs for Research, Development, and Scaleup Tests

Extensive fundamental research and process development are needed. A set of mineral-like phases compatible with SRP waste compositions must be evolved, characterized, and demonstrated to have superior leach resistance. Fabrication techniques must be developed for phase formation and consolidation to full density without melting, grain boundary segregation, or unacceptable off-gassing. Small-scale tests with actual SRP waste and full-scale process demonstration with simulated waste must be done.

Bibliography

G. J. McCarthy. "Crystalline Ceramics From Defense High-Level Wastes." **Nucl. Tech.** 44, 451 (1979).

G. J. McCarthy. "High-Level Waste Ceramics: Materials Considerations, Process Simulation, and Product Characterization." **Nucl. Tech.** 32, 92 (1977).

G. J. McCarthy, W. B. White, S. Komarneni, B. E. Scheetz, W. P. Freeborn, and D. K. Smith. "Hydrothermal Stability of Spent Fuel and High-Level Waste Ceramic in the Geologic Repository Environment." Presented at the International Symposium on Ceramics in Nuclear Waste Management, American Ceramic Society, Cincinnati, Ohio, April 30 - May 2, 1979. Proceedings to be published.

P. E. Ahlström. "Ceramic and Pure-Metal Canisters in Buffer Material." Proceedings of the Conference on High-Level Radioactive Solid Waste Forms, Denver, Colorado, December 19-21, 1978. USNRC Report NUREG/CP-0005, pp 283-316, Nuclear Regulatory Commission, Washington, DC (1979).

APPENDIX A6. SYNROC CERAMIC

SYNROC is a densely consolidated ceramic body composed of several distinct, stable, and mutually compatible mineral-like oxide phases. "SYNROC D" is formed by tailored additions of TiO_2, BaO, ZrO_2, Al_2O_3, CaO, and perhaps other oxides to SRP waste. The radioactive elements in the waste are incorporated as solid solutions in the crystal lattice of perovskite, zirconolite, and hollandite, all titanate-based phases. Other mutually compatible aluminum- and iron-bearing phases will be formed with SRP waste. Practical sizes for the ceramic bodies have not been determined, but in the following discussion, a monolith 2 feet in diameter by 4 feet long, in a metal canister, is assumed. SYNROC D may have up to 70 wt % waste loading on an equivalent oxide basis, or about 3.15 g/cm^3 waste density.

The SYNROC concept was originated by A. E. Ringwood of the Australian National University (ANU). In the United States, further development is being conducted at Lawrence Livermore Laboratory (LLL). A. E. Ringwood of ANU and J. D. Tewhey and C. L. Hoenig of LLL provided part of the information for Appendix A6.

Evaluation of Product

Leachability

Leachability has not been determined for radionuclides. SYNROC formulations have the capacity to accept radioactive waste elements into solid solution in the crystal lattices of the mineral-like phases. These stable phases display marked resistance to radiation damage and dissolution, and thus are expected to exhibit very low leachability. A demonstration of low leachability for a somewhat different SYNROC system was provided in hydrothermal experiments on samples containing 10 wt % simulated commercial waste, prepared by melting nonradioactive simulants. Cesium, strontium, and uranium were retained quantitatively in the SYNROC phases up to 900°C at 5000 atm in hydrothermal leaching tests with brine. SYNROC D formulations have not yet been assessed for leachability. The effect on leachability of the differences between SYNROC D and the melted commercial formulation is uncertain.

If the desired microstructure can be achieved in practice, the SYNROC phase assemblage will offer both mechanical and chemical protection from leaching because of high density and low surface-to-volume ratio. However, selective leaching at high-energy grain boundaries, microcracks caused by inclusions, or impurities on grain boundaries might limit attainment of low leachability.

Long-Term Stability

Long-term stability is expected to be excellent because of the thermodynamic stability of the mineral-like phases and their compatibility with the geology of the repository. Radiation damage and transmutation effects could lower the leach resistance by disrupting the crystal lattice. However, observations of radiation damage in natural perovskites and zirconolites suggest that only minimal structural changes would occur in 10^7 years. The transmutations of strontium to zirconium, and cesium to barium, are expected to be of no consequence to the perovskite and hollandite structures. No radiolysis effects are anticipated.

Thermal Properties

The melting points of the component phases and eutetics are all expected to be above 1200°C. Thermal conductivity of SYNROC is expected to be about 1 Btu/(hr)(ft)(°F), typical of ceramic materials.

Transportation Safety

This product is expected to have excellent fire resistance because of its refractory and nonoxidizable properties. Although the product may be somewhat brittle, it is expected to have high strength and impact resistance. Few fines are expected to be generated in a transportation accident.

Evaluation of the Process

Process Description

A conceptual flowsheet for manufacture, shown in Figure A6.1, is generically similar to that for the supercalcine ceramic form. Predetermined amounts of presynthesized SYNROC additives are admixed as a slurry with sludge, and calcined. Nickel metal powder is dry blended in to reduce Fe(III) to Fe(II). A cold compact is formed at about 50,000 psi. The compact is sintered to about 90% of full density at 1000°C, degassed, loaded into a metal canister, sealed, and isostatically compacted to full density at 1200°C and 30,000 psi. In an alternative process (not shown in Figure A6.1), the cold compact is sintered at 1200°C to full density, and then is packaged for interim onsite storage.

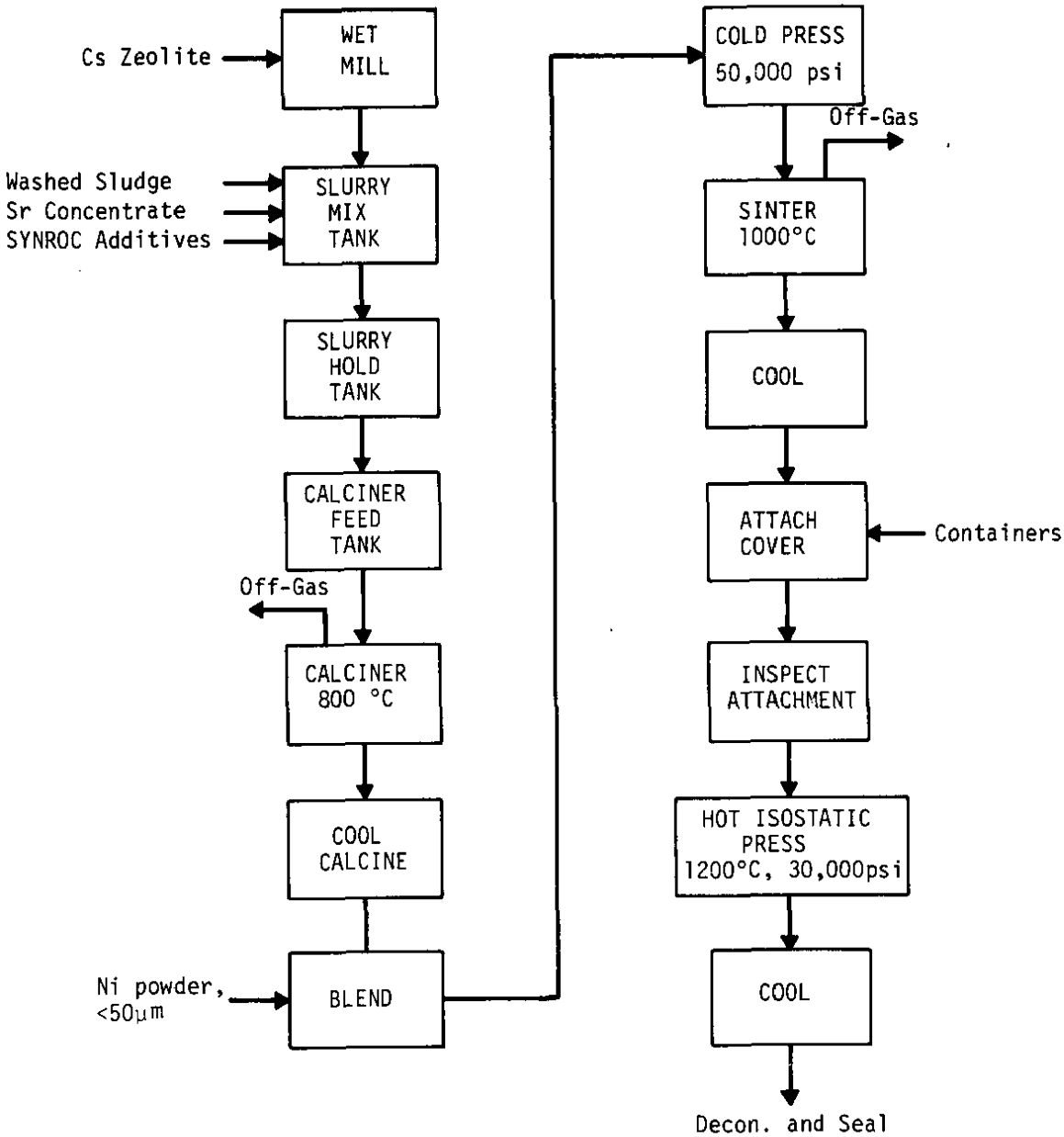

FIGURE A6.1. SYNROC Process

Process Assumptions

The following bases were assumed in developing the flowsheet for SYNROC.

1) A 70 wt % loading of sludge was assumed, based on an assessment of the maximum loading potential for SYNROC.

2) Process conditions are generally as specified by LLL, in consultation with A. E. Ringwood.

3) Sludge compositions will vary from batch to batch, over a period of several months, so that the SYNROC additives will be tailored from an analysis of each sludge batch.

4) No aluminum dissolution is required because Al_2O_3 is an essential ingredient in SYNROC.

5) Sludge will be washed to remove soluble salts.

Areas of Uncertainty

There are many areas of uncertainty because SYNROC process development is in an early stage.

The scale of mixing to form the proper phases must be investigated. Wet milling may be required to comminute coarse zeolites, sand, and coal to <10 μm.

The use of nickel powder in this process to reduce Fe(III) to Fe(II) might not be necessary. Residual coal in the sludge may be an effective reductant and thus eliminate the need for nickel admixing. Also, the addition of nickel could be eliminated by sintering in a reducing atmosphere.

Cold compaction to obtain an integral compact (≥50% of full density) may be difficult for large monoliths. A smaller product with high aspect ratio may be desirable.

The process conditions for hot isostatic compaction are not known. Although full-scale compactions in metal canisters have been made in Sweden, using non-SYNROC compositions, no fabrication data with SRP waste exist. Small-scale hot-pressing experiments at LLL suggest that the process temperature will be below 1200°C.

The radioactive dust occluded in the metal cladding may not be easily decontaminated for subsequent handling in clean cells.

Complexity of the Process

As shown in Figure A6.1, the large number of process steps for SYNROC ceramic indicate high complexity for this process. A powder ceramic process can be difficult to control and may be sensitive to variable feed. Particle-size distributions, compositions, compact densities, and hot-pressing conditions are all very sensitive and thus limit the flexibility and yield of the process. Degassing the compact at 1000°C may vaporize Cs, I_2, Ru, Sb, and Te and thus requires a sophisticated off-gas system. The off-gassing of volatile constituents should be tolerable for isostatic compaction in a metal can. Development of large isostatic hot presses for remote operation and maintenance is a major undertaking. With some minor process modifications, hot isostatic pressing could be done in a contact-maintenance facility.

State of Development

Small-scale laboratory tests at ANU and LLL have shown that compatible phases form with simulated nonradioactive waste compositions from mixtures that are either melted, sintered, or hot-pressed. SYNROC D formulations contain simulated SRP waste. Laboratory specimens have not yet been fully characterized. Swedish work has shown the feasibility of producing full-scale canisters by isostatic hot-pressing, but not on SYNROC compositions nor on radioactive product. However, the Swedish technology should be fully applicable to the SNYROC process. Controlled phase formation has not been demonstrated on a large scale.

Quality Assurance

Quality assurance for this product will be difficult. Techniques will be required to test the massive monolith for completeness of phase formation.

Yield and Recycle

The yield of the process should exceed 95%. Recycle of this product would be difficult. Decladding, crushing, and comminution equipment is required.

Process Safety

The large quantity of potentially respirable, corrosive, and impacting dust is a major concern to safety. The <10-μm powders also significantly increase ventilation filtration surface area and backup requirements. Wet milling techniques will be required

to mitigate these concerns. A safe design also must deal with the pyrophoricity of finely divided nickel powders.

Compatibility with SRP Waste

The SYNROC D composition is tailored to accommodate the high iron, low rare-earth, and moderate silicon and sodium contents in SRP waste. The process requires wet milling the sludge and zeolite to accommodate variable particle sizes. Coal particles in SRP waste may be too coarse to be burned by calcining. Some coal may be helpful in retarding the volatility of ruthenium, technetium, and molybdenum (but will aggravate cesium volatility). However, residual coal might affect the integrity of the monolith, reduce iron oxide and nickel oxide to metal, and cause porosity as CO_2 gas.

Needs for Research, Development, and Scaleup Tests

Extensive fundamental research and process development are needed. A set of mineral-like phases compatible with SRP waste compositions must be developed, characterized, and demonstrated to have superior leach resistance. Fabrication techniques must be developed for phase formation and consolidation to full density without incurring melting, grain boundary segregation, or unacceptable off-gassing. Small-scale tests with actual SRP waste and full-scale process demonstrations with simulated waste must be done.

Bibliography

A. E. Ringwood, S. E. Kesson, N. G. Ware, W. Hibberson, and A. Major. "Immobilization of High-Level Nuclear Reactor Wastes in SYNROC." **Nature 278**, 219 (1979).

A. E. Ringwood. **Safe Disposal of High-Level Nuclear Reactor Wastes: A New Strategy.** Australian National University Press, Canberra (1978).

A. E. Ringwood, S. E. Kesson, N. G. Ware, W. O. Hibberson, and A. Major. "The SYNROC Process: A Geochemical Approach to Nuclear Waste Immobilization." **Geochemistry** (in press).

H. T. Larker. "Densification of Calcines and Direct Containment of Spent Nuclear Fuel in Ceramics by the ASEA Hot Isostatic Pressing Technique." Presented at the International Symposium on Ceramics in Nuclear Waste Management. American Ceramic Society, Cincinnati, Ohio, April 30 - May 2, 1979. Proceedings to be published.

P. E. Ahlström. "Ceramic and Pure-Metal Canisters in Buffer Material." Proceedings of the Conference on High-Level Radioactive Solid Waste Forms, Denver, Colorado, December 19-21, 1978. USNRC Report NUREG/CP-0005, pp 283-316, Nuclear Regulatory Commission, Washington, DC (1979).

APPENDIX A7. CERMET (UREA PROCESS)

Cermet is a dense product with a continuous metal phase and a dispersed ceramic phase. Waste species such as iron and nickel that can be reduced to the metallic state by CO or H_2 are incorporated into the metallic phase as an alloy. Composition of the alloy, about 75 wt % of the cermet, is adjusted with oxide additives that subsequently are reduced. The dispersed ceramic phase is made up of small (about 1 μm) particles whose composition also is determined by chemical additives chosen to tie up nonreducible waste elements such as cesium and strontium. Cermet may be produced as rods or pellets, but diameters are limited by available extrusion technology. Cylindrical pellets 0.6 inch in diameter and 0.6-inch long are assumed in the following discussion. The individual pellets have about 16 wt % loading on an equivalent oxide basis, or about 0.61 g/cm^3 waste density when loaded into a canister with 50% packing void.

The cermet waste form is being developed at ORNL, using a urea process. E. H. Kobisk, W. S. Aaron, and T. C. Quinby of ORNL provided part of the information for Appendix A7.

Evaluation of Product

Leachability

Leach resistance of cermet is determined largely by the composition and density of the metal phase, which can be tailored to repository conditions. Additives stabilize the crystalline ceramic phases, which have high specific surface area but are microencapsulated in the metal matrix. Data from a few leach tests on a cermet waste form are available and show leachability of 10^{-7} to 10^{-8} $g/(cm^2)(day)$ for tracer radionuclides. However, leaching of the high surface area ceramic phases presumably would be rapid if the protective metal phase were corroded away.

Long-Term Stability

Cermet is expected to have excellent stability in the presence of radiation, transmutation, and heat. However, the long-term chemical stability of any practical metal phase in a repository environment is questionable. Because repository conditions may allow corrosive hydrothermal reactions of the waste form, poor durability of the metal matrix must be assumed. When the metal phase corrodes, the small ceramic particles would be exposed and quickly released. Definitive tests of the long-term stability of the cermet waste form are needed to prove or disprove these assumptions.

Thermal Properties

Heat transfer properties of a cermet are excellent, with thermal conductivity about 8 Btu/(hr)(ft)(°F). Cermet pellets in a container with the voids filled with sand would have an effective thermal conductivity of about 0.8 Btu/(hr)(ft)(°F), which is adequate for SRP waste. No gases should be evolved upon heating a cermet.

Transportation Safety

The continuous metal phase has high mechanical strength and impact resistance. Thus, resistance to dispersal of waste in a handling or transportation accident is very high. Cermet integrity in a transportation fire should be maintained because of the high melting points of both the metal and the ceramic phases. Cermet waste forms should not be subject to thermal stress cracking or other high-temperature damage.

Evaluation of the Process

Process Description

Cermets have been formed by a variety of processes. In the following discussion, a continuous urea-based process developed by ORNL is described. A conceptual flowsheet for solidification of SRP waste as a cermet is shown in Figure A7.1. Waste slurry and additives are fed to a dissolver containing molten urea at about 150°C as a solvent. The urea dissolves the waste and additives, and chemically destroys the water. The molten solution is injected into a spray calciner where a number of chemical processes take place simultaneously. A finely divided precipitate of hydrated oxides and amides forms in the calcining liquid. As precipitation continues, gaseous reaction products, primarily nitrogen, water, and carbon dioxide, are evolved. The precipitate of intimately mixed components calcines at 800°C, with removal of residual urea and conversion of the precipitate to oxides. Decomposition products are volatilized during calcination. The calcined oxides are a loose aggregate of fine particles up to 2 μm.

A binder such as water is added to the calcined oxide powder, and 3/4-inch-dia by 3/4-inch-long cylindrical pellets are pressed to 50% of full density in a standard pelletizing machine. The pellets are conveyed to a 1200°C continuous feed furnace where three operations take place: 1) the binder is removed with heat; 2) CO gas is added to reduce the metallic oxides; and 3) the form is sintered. About 6 hours at temperature are required. (ORNL has a liquid-phase sintering technique under development that

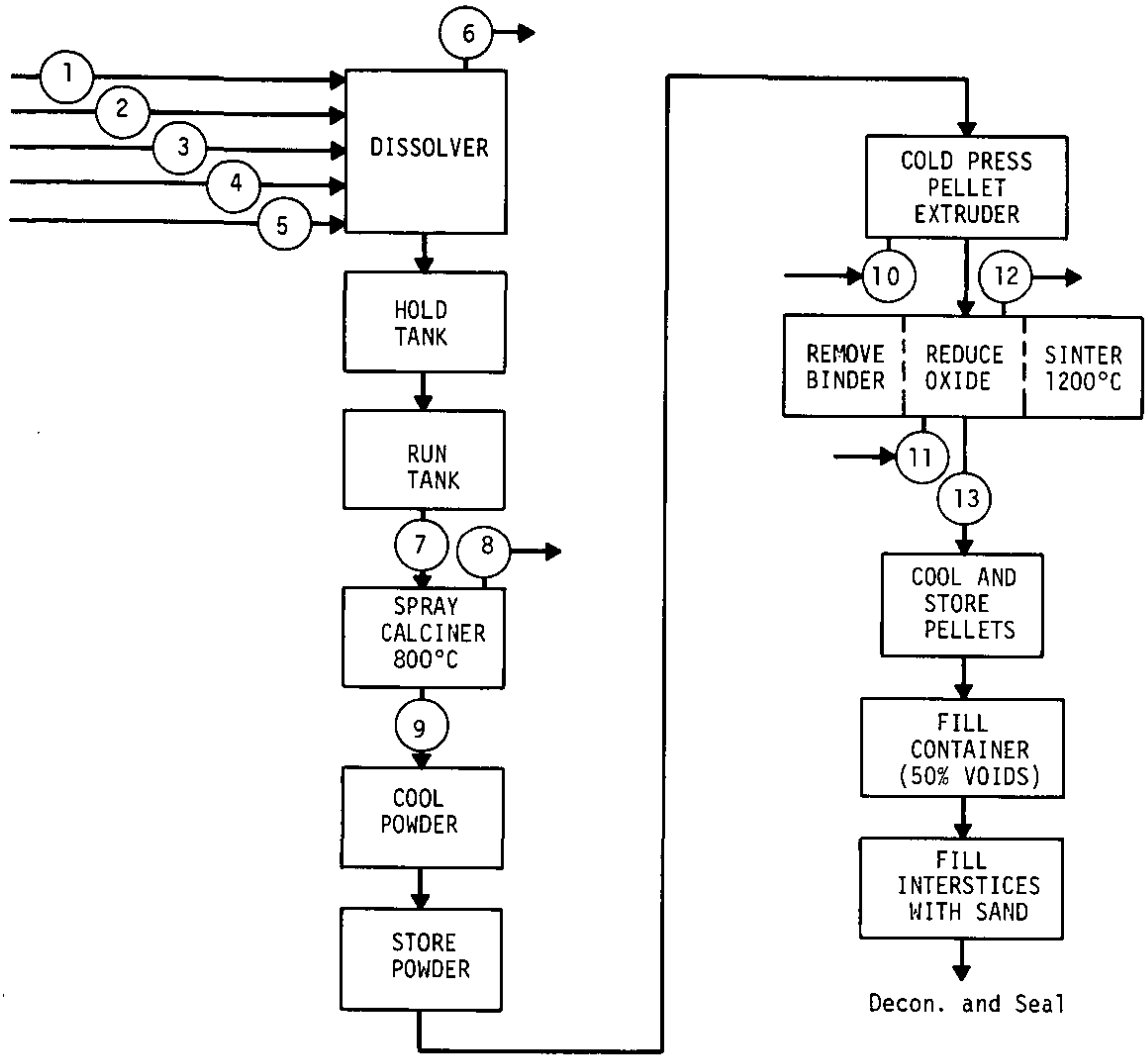

LEGEND:

1) Washed Sludge
2) Cs-Zeolite
3) Sr Concentrate
4) Urea
5) Additives
6) Dissolver Off-Gas
7) Dissolved Waste
8) Calciner Off-Gas
9) Calcine
10) Binder
11) Reducing Gas
12) Furnace Off-Gas
13) Finished Cermet Pellets

FIGURE A7.1. Urea Process for Cermets

could reduce sintering time and temperature considerably.) Finished pellets are loaded into a 2-foot-dia by 8-foot-tall (active length) container to an expected 50% void volume. Sand is added to fill the interstices and increase the effective thermal conductivity of the form from 0.15 (with air in the interstitial space) to 0.8 Btu/(hr)(ft)(°F). The containers are sealed and decontaminated for interim onsite storage.

Process Assumptions

The bases for the ORNL urea process calculations are:

1) Waste composition in Table 4 was assumed. Large zeolite particles were counted as inert, and were assumed to be soluble in urea.

2) Cermet contains 25 wt % ceramic phase/75 wt % metal phase.

3) Ceramic phase contains excess alumina and silica to form nepheline, $NaAlSiO_4$, and excess titania to form perovskite, $CaTiO_3$:

   1.5 moles aluminum salt per mole of alkalai (sodium) in waste

   1.5 moles SiO_2 per mole of alkalai (sodium) in waste

   10 moles titanium salt per mole of alkaline earth (calcium) in waste

4) Metal phase contains Fe 70/Ni 20/Cu 5/Co 5 wt %.

5) Additives are:

$Al(NO_3)_3 \cdot 9H_2O$	76.7 lb/hr
H_2SiO_3	21.9
$(NH_4)_2TiO(C_2O_4)_2 \cdot H_2O$	117.5
$Fe(NO_3)_3 \cdot 9H_2O$	1286.1
$Ni(NO_3)_2 \cdot 6H_2O$	266.9
$Cu(NO_3)_2 \cdot 3H_2O$	54.0
$Co(NO_3)_2 \cdot 6H_2O$	70.0

6) Additives are supplied as 40 wt % aqueous solution (as anhydrous salts).

7) Urea consumption is the sum of:

   1 mole urea per 7 moles of evaporable water, in the dissolver

   1 mole urea per mole of water of hydration, in the dissolver

   1 mole urea per mole of nitrate, in the calciner

8) 6/7 of evaporable water goes to off-gas.

9) Off-gas contains H_2O, CO_2, CO, N_2, and other urea decomposition products.

Areas of Uncertainty

The laboratory batch sequence used at ORNL to produce high-quality cermet samples is not amenable to direct plant application. A continuous process using small-scale equipment has been demonstrated successfully at ORNL, but has had only limited development.

Detailed chemical reactions in the urea cermet process are uncertain. The proposed combination polymerization (of urea)-precipitation-calcination step could be very hard to develop and sensitive to operate. Reduction-sintering kinetics which control the maximum unit size and residence time are not yet known in detail. Adequate solubility of minor waste constituents in urea is assumed.

Off-gas treatment requirements are uncertain. Cesium, strontium, and ruthenium losses from the calciner and sintering furnace could require extensive treatment. However, only moderate treatment is now assumed even though work to define magnitude of losses has not yet been done.

Nearly 80% of the urea is assumed to be consumed by reaction with water in the dissolver. The extent to which the hydrolysis of molten urea proceeds is uncertain. Conceivably, no urea might be consumed in the dissolver, with all water being evaporated from either the dissolver or the calciner. Minimum urea usage is desirable, provided the ceramic phases are adequately dispersed.

Complexity of the Process

The complexity of the ORNL urea process is not clearly defined because of the early state of development. The overall complexity is judged to be average to very complex. About 70 lb of urea are required for each pound of waste immobilized. The

calciner will require about 30,000 scfh air. Equipment that would occupy large amounts of shielded space could be required, which would make the urea process economically unattractive. Future research and development may improve the process significantly.

State of Development

The urea process has had very limited development. The sequence of steps required to produce the form in a plant has been demonstrated in small-scale equipment with simulated commercial waste. Simulated and actual SRP wastes have been incorporated into cermet, although not by the continuous process. Extensive product characterization has not yet been done.

Quality Assurance

The pelletized product form is amenable to quality assurance, which is one of the attractive features of the cermet form.

Yield and Recycle

Process yield is unknown and difficult to predict. Methods for recycle of sintered cermet have not been defined and are expected to be quite difficult. Presumably, a nitric acid dissolution or a high-temperature air oxidation would be required to break down the form.

Process Safety

Pelletizing-extrusion equipment is expected to produce large quantities of dust and require high maintenance due to the large number of mechanical operations. CO gas is used as a reductant at temperatures well above its autoignition temperature of 651°C; therefore, the concentration of CO must be maintained well below the flammability limit of 6.3 vol % and lower explosive limit of 12.5 vol %. Air must be excluded from the furnace environment.

Compatibility with SRP Waste

SRP waste apparently is well suited for incorporation into cermet. However, the waste form volume is very sensitive to sodium content. Each pound increase of sodium (as oxide) results in a 25-lb increase in the waste form. Thorough washing of salts from the sludge is required, and changes to reduce sodium from the supernate treatment portion of the DWPF would be desirable. The good heat conduction generally associated with cermet is not required for SRP waste.

Needs for Research, Development, and Scaleup Tests

Extensive process and product research and development would be required to develop cermet to a point where large-scale feasibility can be determined. The effect of product size on time requirements for reduction and sintering needs to be determined to establish maximum practical size. Representaive forms should be evaluated for leachability, which may be substantial due to presence of metal and large surface area of ceramic phase. Metal alloys which are chemically durable in worst-case repository environments throughout the anticipated immobilization period need to be identified. Small-scale tests with simulated and actual SRP waste with optimized process conditions are needed. Engineering development and scaleup for remote operation must be demonstrated.

Bibliography

T. C. Quinby. "Method of Producing Homogeneous Mixed Metal Oxides and Metal-Metal Oxide Mixtures." U. S. Patent 4,072,501, February 7, 1978.

W. S. Aaron, T. C. Quinby, and E. H. Kobisk. "Cermet High-Level Waste Forms. USDOE Report ORNL/TM-6404, Oak Ridge National Laboratory, Oak Ridge, TN (1978).

W. S. Aaron, T. C. Quinby, and E. H. Kobisk. "Development of Cermets for High-Level Radioactive Waste Fixation." Presented at International Symposium on Ceramics in Nuclear Waste Management, American Ceramic Society, Cincinnati, Ohio, April 30 - May 2, 1979. Proceedings to be published.

"High-Level Waste Program Progress Report for April 1, 1979, through June 30, 1979." USDOE Report ORNL/TM-7013, pp 21-30, Oak Ridge National Laboratory, Oak Ridge, TN (1979).

APPENDIX A8. GLASS MARBLES IN METAL MATRIX

Glass marbles in a metal matrix provide an alternative to large castings of glass for immobilization of high-level waste. Molten glass is cast into marbles 1.3 cm in diameter. The marbles are loaded into a canister, and the void space is filled with a low-melting lead-tin alloy to provide a continuous metal phase. The metal matrix provides an additional barrier for waste isolation and a path for heat conduction from the waste. Waste loading of the glass marbles is the same as for borosilicate glass, about 25 wt % on an equivalent oxide basis. About 50% of the volume of a cylindrical canister 2 feet in diameter by 10 feet long (filled to 8 feet) is assumed to be occupied by the marbles after allowance for an annulus for introducing the lead alloy. The net waste loading is about 4.4 wt %, or about 0.29 g/cm^3 waste density.

This waste form has been developed in Europe (PAMELA process) by Eurochemic; in the United States, metal-matrix forms are being developed at PNL, with additional work at ANL. J. M. Rusin, R. L. Treat, and J. F. Nesbitt of PNL provided part of the information for Appendix A8.

Evaluation of Product

Leachability

The multibarrier concept as applied to glass marbles provides a compromise between short-term and long-term leaching. (Here, long-term applies to that period after the canister and the matrix have failed due to corrosion.) Short-term performance is improved because of the protection and isolation added by the metal matrix. However, long-term performance is diminished because the surface area of the marbles is about 30 times that for a monolith containing an equal amount of glass; the marbles would have only two-fold greater surface area than that of typical glass monoliths that have fractured on cooling. Therefore, the long-term leach resistance of the glass marbles will be comparable to that of large glass castings that have fractured. The outer sleeve of lead alloy provides an additional barrier to leaching; such sleeves are more appropriately treated as part of the canister rather than part of the waste form.

Two major product problems must be solved if the leaching performance of this waste form is to be acceptable. First, as currently fabricated at PNL, the form has interconnecting channels throughout the structure which allow leaching liquid to reach the relatively high surface area of the marbles. These channels are formed at the interface between marbles and metal, and appear to result from the difference in contraction of the two materials

during fabrication, as they cool after freezing. Eurochemic has developed techniques to prevent channeling that may be applicable to glass marbles containing SRP waste. Second, chemical durability of the metal alloy must be established for the full period during which protection is expected. Otherwise, the increased surface area of the marbles will result in increased leaching as a result of the multibarrier approach. Corrosion rate of the metal matrix will depend on interactions which are not yet understood, with the glass marbles containing the waste, with the canister, and with the repository.

Long-Term Stability

Long-term stability of this multibarrier form will be identical with borosilicate glass except as affected by the chemical durability of the metal matrix. The effect of matrix dissolution or erosion is discussed above. Glass marbles are less likely to devitrify than monoliths because of shorter exposure to elevated process temperatures. Stability under radiation and transmutation are expected to be superior. (See also Appendix A1.)

Thermal Properties

Thermal conductivity of this multibarrier form is about 4.5 Btu/(hr)(ft)(°F). This is 22% of the conductivity of the metal phase. However, in calculating the temperature within any individual marble, it is necessary to account for the conductivity of the marble itself and any heat transfer resistance at the interface between marble and metal. Above 300°C, the metal matrix melts.

Transportation Safety

The metal barrier provides an extra measure of impact resistance in potential transportation accidents and will reduce probability of dispersal due to impact. The alloy has a low melting point and thus will be susceptible to melting in case of transportation fire or storage fire. Since the alloy is in direct contact with the glass, the melt would spread contamination in such an accident.

Evaluation of the Process

Process Description

The process is identical to the reference borosilicate glass process through the ceramic melter. The discharge of the melter is fed to a marble-making machine which may be either a vibratory machine as invented by Corning Glass and used by PNL, or a rotary machine as used for the PAMELA process. The glass beads are loaded into a container which is then filled with molten lead alloy by gravity casting, as shown in Figure A8.1. A canister with an outside diameter of 24 inches and a concentric inner basket with a diameter of 22 inches is used. Marbles are placed in the inner container, and the canister is heated to a temperature approximately 30°C above the melting point, which is about 300°C for a 90% lead-10% tin alloy. Liquid alloy is poured into the annulus to fill the canister. The alloy then is frozen by cooling from the bottom up. After solidification is complete, a small amount of alloy is added to finish filling the container. The can is cooled, sealed, decontaminated, and moved to interim onsite storage.

Process Assumptions

Glass is produced by the reference borosilicate glass process, which defines composition and throughput.

1) Glass density is 2.37 g/cm^3; alloy density is 10.7 g/cm^3.

2) Canister (with annulus) contains 50 vol % marbles and 50 vol % metal alloy.

Areas of Uncertainty

Major change in process steps might result from the changes required to solve the product problems listed above. Pb(90)-Sn(10) alloy is chosen as the matrix material for the process described, but other alloys with melting points less than the softening point of the borosilicate glass (500°C) might be acceptable. Other methods of metal matrix formation could be used, but gravity-casting was chosen for simplicity.

Complexity of the Process

Several relatively simple steps are added to the reference borosilicate glass process in order to manufacture this product. Container weight is increased by a factor of three, so that handling equipment will need to be more rugged than for the reference

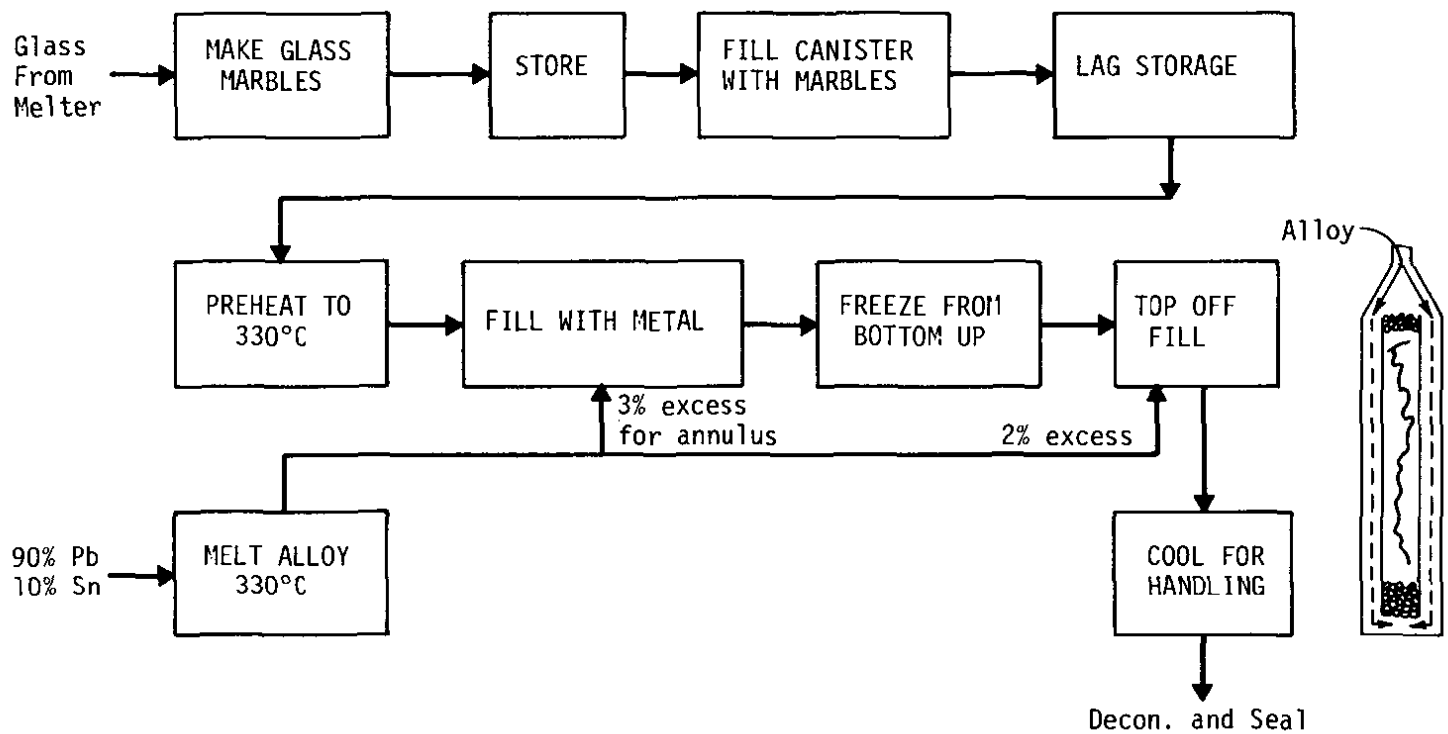

FIGURE A8.1. Process for Glass Marbles in Metal Matrix

process. These additional steps and equipment are quite straightforward. The overall complexity is moderate and is greater than the reference process.

State of Development

This process is being actively developed by Eurochemic for use by DWK as a backup to the continuous vitrification process. A demonstration plant will start operation with radioactive feed in the mid-1980's. In the United States, only small-scale development with nonradioactive feed has been done.

Quality Assurance

An outstanding attribute of this form is the ease with which the quality of the primary waste component, the glass marbles, can be assured. Representative samples are readily available, and glass quality control tests are relatively simple. However, assurance of the integrity of the glass-metal bonds may be more difficult.

Yield and Recycle

The low melting point of the matrix and the small marble size will make recycle of this product relatively easy. First-pass yield of marbles should be high because of relative insensitivity to composition changes and relative freedom from thermal stress due to their small size.

Process Safety

The potential for exposure of operating personnel or the general public to radioactive materials is essentially the same as for the reference process. The glass marble machines are expected to require a relatively high level of maintenance, some of which will probably require remote removal and decontamination, and thus high personnel exposures.

Compatibility with SRP Waste

Glass marbles are well suited for immobilization of SRP waste. Waste loadings are limited only by the effect of aluminum and iron on glass quality. The good heat transfer properties of this form are not required for SRP waste, because the heat generation rate is relatively small compared to that of commercial waste.

Needs for Research, Development, and Scaleup Tests

Much current research and development for large glass castings is directly applicable to this form. In addition, the Eurochemic work on fabrication of this type waste form is applicable. Research into glass-metal bonding interactions and chemistry is needed, along with studies of corrosion resistance of matrix metals in geochemical environments. Fabrication techniques will need to be established, and a large-scale demonstration facility would be required prior to incorporation of this process in a DWPF.

Bibliography

J. M. Rusin, R. O. Lokken, J. M. Lukacs, K. R. Sump, M. F. Browning, and G. J. McCarthy. "Multibarrier Waste Forms, Part I: Development." USDOE Report PNL-2668-1, Pacific Northwest Laboratory, Richland, WA (1978).

J. M. Rusin, W. J. Gray, and J. W. Wald. "Multibarrier Waste Forms, Part II: Characterization and Evaluation." USDOE Report PNL-2668-2, Pacific Northwest Laboratory, Richland, WA (1979).

L. J. Jardine and M. J. Steindler. "A Review of Metal-Matrix Encapsulation of Solidified Radioactive High-Level Waste." USDOE Report ANL-78-19, Argonne National Laboratory, Argonne, IL (1978).

U. S. Patent 3 254 979, "Method for Forming Balls from Thermoplastic Materials." Warren R. Knapp and Elmer R. Smith, assignors to Corning Glass Works, August 1962.

J. van Geel, H. Eschrich, F. Dobbels, P. Favre, and H. Sterner. "Incorporation of Solid High Level Wastes into Metal and Non-Metal Matrices." Proceedings of the Conference on High-Level Radioactive Solid Waste Forms, Denver, Colorado, December 19-21, 1978. USNRC Report NUREG/CP-0005, pp 341-389, Nuclear Regulatory Commission, Washington, DC (1979).

W. Heimerl. "Solidification of HLW-Solutions with the PAMELA-Process." Presented at the International Symposium on Ceramics in Nuclear Waste Management, American Ceramic Society, Cincinnati, Ohio, April 30 - May 2, 1979. Proceedings to be published.

APPENDIX A9. CERAMIC PELLETS IN METAL MATRIX

One adaptation of the multibarrier waste-form concept is the dispersal of sintered crystalline ceramic pellets in a metal matrix. Any one of the several crystalline ceramic waste forms may be fabricated as pellets; in the following discussion, supercalcine was chosen as representative of the generic class. Supercalcine ceramic (described in Appendix A5) is a crystalline assemblage of mutually compatible, refractory, and leach-resistant solid-solution phases incorporating the high-level waste elements. Pellets with diameters of about 6 mm are contained in a 2-foot-dia canister with a concentric inner wall, as described for glass marbles in Appendix A8. The void space is filled with vacuum-cast 88Al-12Si alloy. The high waste loading of supercalcine ceramic (up to 95 wt %) combined with the relatively light aluminum matrix results in a composite waste loading of about 56 wt % on an equivalent oxide basis, or about 1.7 g/cm^3 waste density.

This metal-matrix waste form is being developed at PNL. J. M. Rusin, R. L. Treat, and J. F. Nesbitt of PNL provided part of the information for Appendix A9. In addition, INEL has developed metal-matrix forms for pellets of calcined waste with no special tailoring of composition.

Evaluation of Product

Leachability

Leach resistance of the form is determined by both the metal matrix and the crystalline ceramic media. Sintered supercalcine is expected to be superior to borosilicate glass and somewhat inferior to hot-isostatic-pressed supercalcine ceramic monoliths. Aluminum-silicon alloy is recommended by PNL as the matrix material. However, these alloys are not suitable for use in seawater, mine water, or water containing heavy metal ions. An alloy with good chemical durability under repository conditions and melting temperature low enough to allow casting without excessive loss of radioactive components from the ceramic pellets is assumed. Definition of repository conditions that the form must endure, and identification of a suitable matrix metal which is stable under those conditions, is essential to development of this form.

Long-Term Stability

Long-term stability will be identical with supercalcine ceramic as described in Appendix A5, except as affected by chemical durability of the metal matrix. The effect of matrix corrosion is

to destroy one barrier and expose a surface with about 80 times the surface area of a monolith. The metal matrix can accept stresses from any metamictization that might occur from long-term radiation damage.

Thermal Properties

Thermal conductivity is expected to be about 30 Btu/(hr)(ft)(°F), which is at least an order of magnitude greater than most glass or crystalline ceramic forms. The thermal conductivity is far higher than required for SRP waste immobilization. Above about 600°C, the metal matrix melts.

Transportation Safety

The metal barrier provides an extra measure of impact resistance in potential transportation accidents and will reduce probability of dispersal due to impact. Crystalline ceramics may be subjected to high temperatures during the metal matrix encapsulation step. Therefore, high melting alloys may be chosen, and suitable resistance to transportation or storage fires is expected.

Evaluation of the Process

Process Description

Waste calcine powder is prepared by a process like the one described in Appendix A5. Then, the powder is made into pellets with diameters of 6 to 10 mm with a disc pelletizer, as shown in Figure A9.1. The pellets are sintered to form crystalline ceramic bodies with several solid-state phases. The pellets then are loaded into canisters and encapsulated in a metal matrix that provides additional strength and an additional barrier to leaching.

As described in Appendix A5, the various waste elements are preferentially incorporated in specifically chosen solid-state phases of the crystalline ceramic structure during sintering. Therefore, the calciner feed stream additives are chosen to provide a calcine composition that has the desired solid-state phases in the desired quantities. Waste and additives are intimately mixed prior to calcination so that each species can migrate into the proper phase during sintering.

Ceramic pellets are prepared by feeding the calcined oxides along with water as a binder to a disc pelletizer. By choosing suitable pelletizer operating conditions and binder flow, a continuous stream of pellets can be produced from the spray-calcined

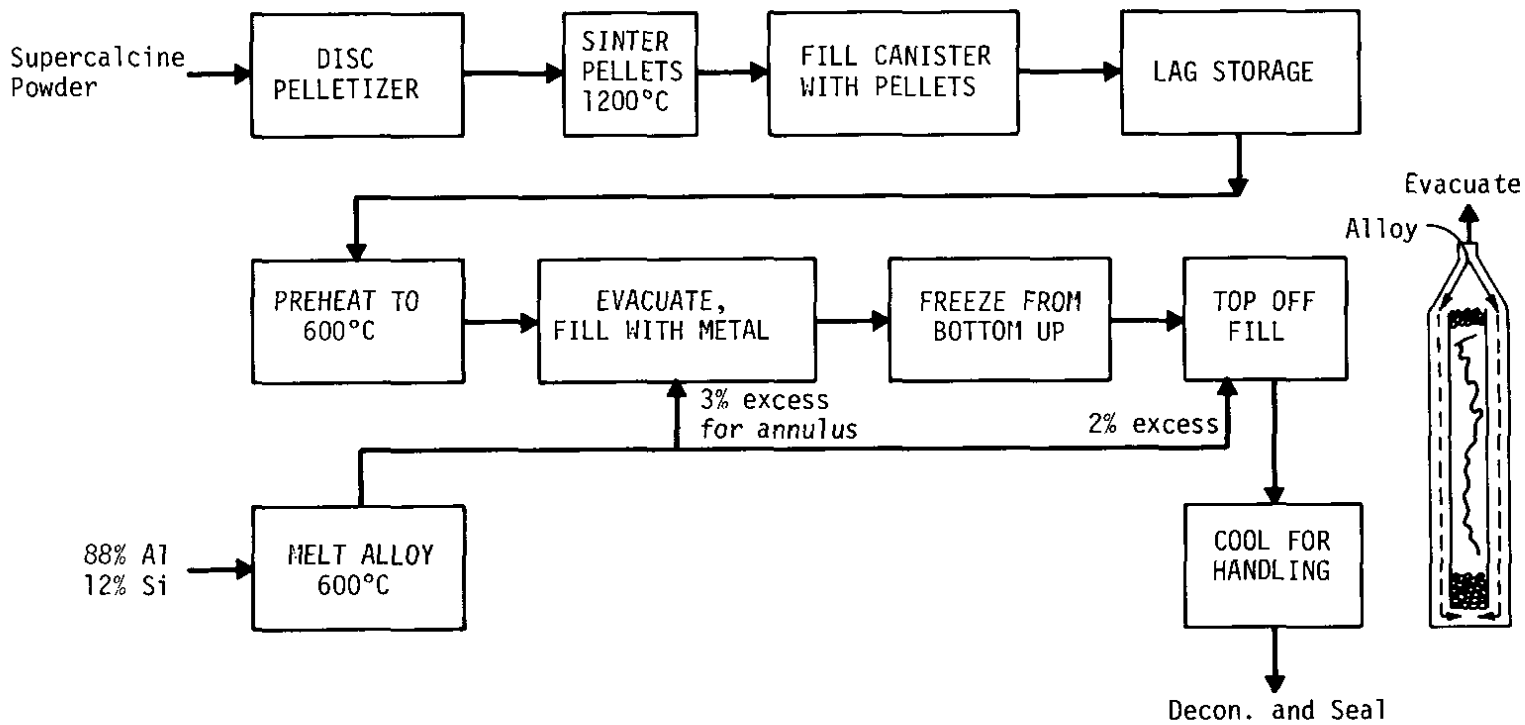

FIGURE A9.1. Process for Producing Ceramic Pellets in a Metal Matrix

material. The pellets are screened to recycle loose powder and off-size pellets. A dust collection and recycle system provides containment for the radioactive powder and prevents contamination. The pellets are heated in a sintering furnace at 1200°C in air for 2 hours. Sintering causes the pellets to densify, become physically strong, and form the desired crystalline phases. The ceramic pellets are loaded into a container and then encapsulated in an Al-Si matrix by vacuum casting. The same type container as for glass marbles in a metal matrix (described in Appendix A8) is used here. A casting temperature of slightly over 600°C is used for the Al-Si alloy, which melts at 582°C. The alloy then is frozen by cooling from the bottom up. After solidification is complete, a small amount of alloy is added to finish filling the container. The can is cooled, sealed, decontaminated, and moved to interim onsite storage.

Process Assumptions

The bases for the process to produce this form are identical to those of supercalcine ceramic as given in Appendix A5, except:

1) Pellets are sintered to 3.4 g/cm^3, which is 85% of full density; the alloy density is 2.66 g/cm^3.

2) Canister (with annulus) contains 50 vol % pellets and 50 vol % metal alloy.

Areas of Uncertainty

Consistent immobilization of waste elements in appropriate phases of crystalline ceramics must be demonstrated. Consistent consolidation of crystalline ceramics by sintering also needs to be demonstrated. Possible reactions of the metal matrix with the ceramic pellets at the interfaces has not been studied.

Complexity of the Process

The process complexity is roughly equivalent to the supercalcine process (Appendix A5). A hot isostatic press is eliminated, but a ceramic pellet-making machine and a sintering furnace are gained. Successful immobilization of SRP waste in crystalline forms requires a consistent high level of homogenization on the micron scale. Disc pelletization is potentially a high-maintenance operation, and an additional dust collection system is required because of it. However, disc pelletization is simple compared to hot isostatic pressing. Handling and sintering of an estimated 17,000 pellets/hour will introduce mechanical operations which have

not been demonstrated in a remote shielded environment. Remote operation and remote change-out for maintenance are required for all pellet-formation and handling equipment, as well as for the chemical processing steps. This kind of operation has never been carried out routinely to manufacture high-quality pellets.

State of Development

Laboratory feasibility of this form was demonstrated at PNL. In addition, pellets of calcine in a metal matrix have been produced at INEL. However, in general, this waste form is in an early stage of development. Simulated SRP sludge has not yet been incorporated into a crystalline ceramic, and appropriate recipes have only recently been suggested. PNL has disc-pelletized simulated Hanford waste.

Quality Assurance

The pellets are easy to sample for quality assurance. However, analysis for proper phase formation is expected to be quite difficult. Assurance of proper matrix formation and of metal-to-pellet bonding may also be difficult.

Yield and Recycle

No quantitative estimate of yield is possible at this stage of development. Recycle of faulty pellets will require grinding the pellets to a particle size of about 1 μm, and associated dust control equipment will be required.

Process Safety

The large amount of mechanical equipment will require significant radioactive exposure to personnel for maintenance. Several operations that generate or require handling powder also have high potential for personnel exposure and contamination.

Compatibility with SRP Waste

SRP waste seems to be well suited to crystalline ceramic immobilization. The improved internal heat transfer provided by the metal matrix offers little advantage for SRP waste, which has relatively low heat-generation rate.

Needs for Research, Development, and Scaleup Tests

Extensive research and development are required for development of crystalline ceramic forms, as listed in Appendices A5 and A6. In addition, sintering as a means of consolidation needs to be developed with waste of SRP composition. Equipment for remote pelletizing needs to be developed and demonstrated, and metal-encapsulating techniques need to be demonstrated on a large-scale basis.

Bibliography

J. M. Rusin, R. O. Lokken, J. M. Lukacs, K. R. Sump, M. F. Browning, and G. J. McCarthy. "Multibarrier Waste Forms, Part I: Development." USDOE Report PNL-2668-1, Pacific Northwest Laboratory, Richland, WA (1978).

J. M. Rusin, W. J. Gray, and J. W. Wald. "Multibarrier Waste Forms, Part II: Characterization and Evaluation." USDOE Report PNL-2668-2, Pacific Northwest Laboratory, Richland, WA (1979).

L. J. Jardine and M. J. Steindler. "A Review of Metal-Matrix Encapsulation of Solidified Radioactive High-Level Waste." USDOE Report ANL-78-19, Argonne National Laboratory, Argonne, IL (1978).

J. van Geel, H. Eschrich, F. Dobbels, P. Favre, and H. Sterner. "Incorporation of Solid High Level Wastes into Metal and Non-Metal Matrices." Proceedings of the Conference on High-Level Radioactive Solid Waste Forms, Denver, Colorado, December 19-21, 1978. USNRC Report NUREG/CP-0005, pp 341-389, Nuclear Regulatory Commission, Washington, DC (1979).

K. M. Lamb. "Final Report: Development of a Metal Matrix for Incorporating High-Level Commercial Waste." USDOE Report ICP-1144, Allied Chemical Corporation, Idaho National Engineering Laboratory, Idaho Falls, ID (1978).

K. M. Lamb and H. S. Cole. "Development of a Pelletized Waste Form for High-Level ICPP Zirconia Wastes." USDOE Report ICP-1185, Allied Chemical Corporation, Idaho National Engineering Laboratory, Idaho Falls, ID (1979).

APPENDIX A10. COATED CERAMIC

The coated-ceramic waste form is a multibarrier product consisting of 1 to 4 mm pellets of crystalline ceramic such as supercalcine ceramic or SYNROC, which contain the high-level waste at normal loadings. (See Appendix A5 for a complete description of supercalcine ceramic, and Appendix A6 for SYNROC.) A variety of coatings are possible, but in the following discussion, the pellets are coated with a thin (40 μm) layer of pyrolytic carbon for leach protection, and overcoated with a thin (60 μm) layer of α-Al_2O_3 for mechanical and oxidation protection. PNL has embedded coated supercalcine pellets in a matrix of vacuum-sintered copper to provide improved heat transfer and additional physical protection. However, for SRP waste the copper matrix is not needed for heat transfer; the pellets could be loaded into a canister and then the void spaces could be filled with sand.

This type of coating technology was developed at Battelle-Columbus and applied to simulated commercial waste in collaboration with PNL. J. M. Rusin, R. L. Treat, and J. F. Nesbitt of PNL provided part of the information for Appendix A10.

Evaluation of Product

Leachability

Short-term leach tests on coated pellets containing radioactive tracers have revealed no loss of radioactivity; leachability was too small to measure in these tests. The high-integrity pyrolytic carbon and alumina coatings are among the most leach-resistant coatings known. Such coatings have the potential for enduring throughout the period required for ^{137}Cs and ^{90}Sr decay and for providing excellent isolation of the ceramic from its surroundings during this period. Crystalline ceramics have excellent potential for leach resistance, and the coatings provide an additional barrier to increase the leach protection.

Long-Term Stability

Long-term stability of the crystalline ceramic pellets is potentially excellent. However, some solid-state phases may be disrupted or become amorphous when subjected to radiation or transmutation. The coatings themselves are expected to have exceptionally high stability and have the potential to retain their integrity throughout the radioactive life of the principal fission products in the waste. Alpha-alumina is one of the most refractory and chemically inert materials commonly used. Pyrolytic

carbon in combination with silicon carbide has been used with considerable success as a coating for high-termperature gas-cooled reactor fuel particles, preventing escape of gaseous fission products. HTGR service is considerably more severe than the most extreme conditions anticipated for waste transportation or storage.

Thermal Properties

No thermal transitions are anticipated under 1000°C. Thermal conductivity will be relatively low for the pellets, as is typical for ceramic oxides, but will be adequate for the low heat generation rates of SRP waste. As demonstrated by PNL, a vacuum-sintered copper matrix could be used to provide excellent overall heat conduction. However, void spaces filled with sand will provide adequate conduction with SRP waste.

Transportation Safety

Transportation fires should have only minor effects on this product, because no thermal transitions take place below 1000°C. The pelletized or granular nature of the immobilized waste, together with a sand (or metal) matrix, gives the waste form considerable impact resistance.

Evaluation of the Process

Process Description

A crystalline ceramic precursor oxide powder is formed in a calciner or dryer as described in Appendix A5 for supercalcine ceramic and Appendix A6 for SYNROC. An alternative method of feed preparation, by the sol-gel process, is described in Appendix A11. The oxide powder blend is metered to a pelletizer where a binder such as water is added, and pellets are sintered at 1100 to 1300°C to remove binder, consolidate to about 85% of theoretical density, and allow proper solid-state phase formation of the crystalline ceramics. Undersized pellets are crushed and combined with collected dust from the pelletizing operation, to be recycled as feed to the pelletizer.

The sintered ceramic particles are coated by any of several techniques. The preferred route at this time is chemical vapor deposition. As shown in Figure A10.1, pyrolytic carbon is deposited by thermal decomposition of acetylene in 50% argon in a fluid-bed reactor at 1100°C, to deposit carbon from the gas phase onto the pellets. Because thermal expansion of alumina differs from that of the base crystalline ceramic, a low density, crushable

alumina undercoat is applied as protection over the pyrolytic carbon. This is applied from a gaseous mixture of $AlCl_3$, H_2O, and H_2 passing through a bed of particles in a rotating drum or vibrating bed coater at 1100°C. Next, an impervious alpha-alumina layer is built up by switching to an $AlCl_3$, CO_2, H_2 gaseous mixture in the same coating equipment.

Metal-matrix encapsulation of the finished pellets is not envisioned for SRP waste. However, the step has been demonstrated at PNL for commercial waste by packing the coated particles in copper powder and sintering. For SRP waste, the coated particles would be loaded into a canister which would then be packed with sand, sealed, decontaminated, and moved to interim onsite storage.

Process Assumptions

The following bases were assumed in developing a flowsheet for coated ceramic.

1) Either supercalcine or SYNROC calcine will be used to form pellets. Appropriate assumptions dicussed in Appendices A5 and A6 will apply.

2) Coating techniques, equipment, and conditions are as specified by PNL. Other techniques and conditions are expected to be developed on reduction to practice.

3) No matrix encapsulation is assumed for SRP waste. However, copper or a variety of other materials may be suitable if needed.

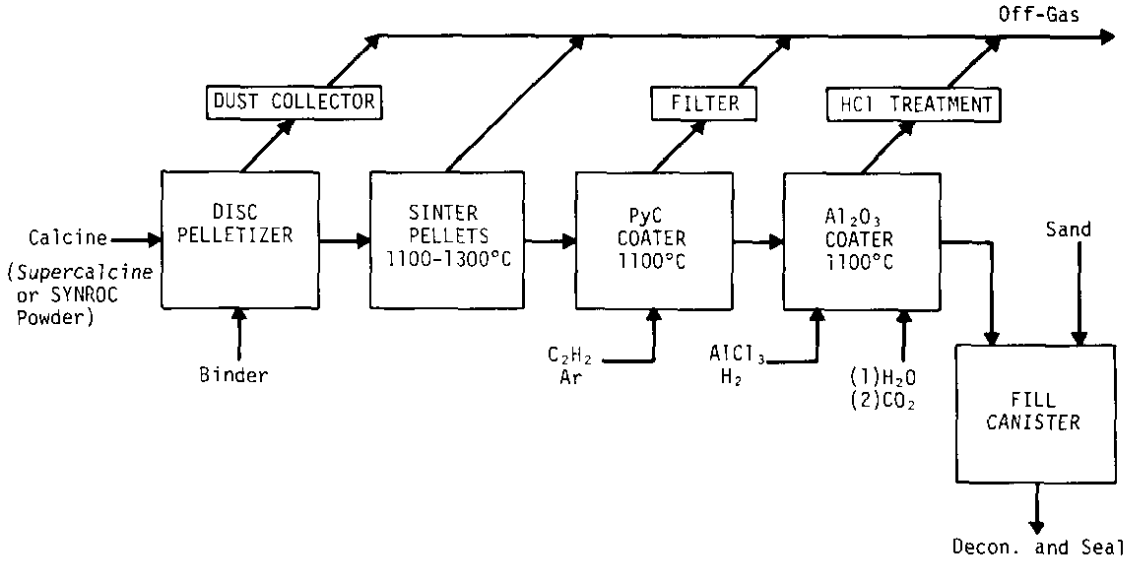

FIGURE A10.1. Coated Ceramic Process

Areas of Uncertainty

All of the uncertainties of producing a waste powder of tailored composition, as described in Appendices A5 and A6, apply to this waste form. Although the feasibility of the major process steps (pelletizing and coating) has been demonstrated, reduction to practice remains to be accomplished. The basic incompatability of the thermal expansions of dense alpha-alumina and the ceramic core suggests that other coatings, such as SiC, and other combinations of coatings should be investigated further.

Complexity of the Process

This process requires high temperatures and a large number of process steps. To be fully effective, the ceramic portion must form multiple solid-state phases, and the waste elements must be well distributed within the proper phases. In the feed, particle size distributions and homogeneity must be well controlled. Nuclear fuel coating has shown the feasibility of application of coatings, but for waste coating, both the need for several layers and the use of explosive H_2 gas add to the complexity of the process. Each of the individual steps is relatively simple and easy to control. Off-gas treatment will be extensive. Large quantities of HCl (3 to 5 lb/hr) produced during the alumina coating operation will require treatment.

State of Development

Considerable development on both the coatings and the ceramic pellet is required to reduce this process to practice. The compositions of neither the ceramic nor the coatings have been selected. However, the general feasibility has been demonstrated. Several pounds of pellets and 1-liter canisters of the waste form have been produced with simulated commercial waste. No large-scale tests or tests with SRP waste have been done.

Little is known about the ability to produce the ceramic properly by sintering. However, this overcoating process is expected to be somewhat forgiving of lower density and incomplete phase formation in the ceramic, because pyrolytic carbon is expected to penetrate open porosity and seal the ceramic in a nonleachable envelope with long-term stability. The coating technology is particularly sensitive and requires optimization to ensure that quality coatings can be obtained routinely.

Quality Assurance

In addition to the extensive protection provided by this product, a primary attribute is the ease of representative sampling. Samples of the small coated pellets can be removed easily from the production line and destructively tested for completeness of phase formation, density, quality of overcoats, and homogeneity. The ability to analyze samples routinely has not yet been demonstrated.

Yield and Recycle

The yield for this process is expected to be quite high in spite of its complexity. Faulty coatings can be stripped by oxidation for carbon or reverse vapor deposition for Al_2O_3, or recoated with redundant layers. Insufficient densities can be alleviated by refiring. In general, the manufacture of small product forms, rather than monoliths, the relative simplicity of the individual equipment and unit operations, and the nature of the barriers provide a great deal of flexibility to obtain high yield and low recycle. Crushing and comminution equipment is required to recycle unclad pellets.

Process Safety

The principal areas of concern for process safety are generally the same as for the other processes: (1) the hazards of fine, dry, radioactive powders during calcination, and (2) the off-gas of volatile radionuclides during the 1100 to 1300°C sintering and the 1100°C coating operations. Some unique concerns are use of combustible acetylene or other hydrocarbon for pyrolytic carbon coating, use of H_2 for alumina coating, and disposal of HCl solution from the Al_2O_3 coating.

Compatibility with SRP Waste

Compatibility with SRP sludge is the same as already described for supercalcine ceramic and SYNROC (Appendices A5 and A6). The ability to produce high-quality crystalline ceramic cores that will accommodate the particle-size distribution (scale of mixing); variable composition; coarse 400 to 900 μm waste particles of zeolite, sand, and coal; and special wastes at the end of the production campaign must be demonstrated.

Needs for Research, Development, and Scaleup Tests

In addition to development of crystalline ceramics as described in Appendices A5 and A6, appropriate coatings must be identified, and technology for large-scale application of coatings must be developed for waste pellets. Technology envisioned for this product is used on a large scale to produce HTGR fuel pellets. However, only bench-scale, batch experiments have been done with simulated waste. The total process development task remains to be done.

Bibliography

J. M. Rusin, R. O. Lokken, J. M. Lukacs, K. R. Sump, M. F. Browning, and G. J. McCarthy. "Multibarrier Waste Forms, Part I: Development." USDOE Report PNL-2668-1, Pacific Northwest Laboratory, Richland, WA (1978).

J. M. Rusin, W. J. Gray, and J. W. Wald. "Multibarrier Waste Forms, Part II: Characterization and Evaluation." USDOE Report PNL-2668-2, Pacific Northwest Laboratory, Richland, WA (1979).

K. M. Lamb and H. S. Cole. "Development of a Pelleted Waste Form for High-Level ICPP Zirconia Wastes." USDOE Report ICP-1185, Allied Chemical Corporation, Idaho National Engineering Laboratory, Idaho Falls, ID (1979).

APPENDIX A11. COATED CERAMIC VIA SOL-GEL

This product consists of 1-mm-diameter spherical ceramic particles prepared by a sol-gel process, and then coated with layers of pyrolytic carbon and Al_2O_3, as described in Appendix A10. The ceramic kernel can be SYNROC (Appendix A6), supercalcine ceramic (Appendix A5), glass, or untailored calcine. Other coatings, such as silicon carbide, and other combinations of coatings are also possible.

This waste form is entirely conceptual, because sol-gel and coating technologies have never been combined as described above. However, both operations are used to produce HTGR fuel. General sol-gel technology has been developed by ORNL. W. J. Lackey of ORNL provided part of the information for Appendix A11.

Evaluation of Product

Leachability

The leach resistance is the same as for the multibarrier ceramic forms discussed in Appendix A10.

Long-Term Stability

This characteristic is expected to be the same as described in Appendix A10.

Thermal Properties

This characteristic is expected to be the same as described in Appendix A10.

Transportation Safety

This characteristic is expected to be the same as described in Appendix A10.

Evaluation of the Process

Process Description

This process will involve peptizing SRP sludge with ceramic additives to obtain a stable suspension of nominally micron-sized or smaller particles. The slow settling rate of SRP sludge (1 inch/hr) indicates the sludge is nearly a sol already. With

this process, sols or solutions are pumped through an orifice, and the liquid stream breaks up in a controlled manner to yield individual liquid droplets which then gel into rigid spheres. As shown in Figure A11.1, subsequent solid-state sintering at 800 to 1000°C yields dense crystalline spheres. The 1-mm spheres then can be coated with pyrolytic carbon followed by silicon carbide or alumina, as described in Appendix A10.

The advantages offered by forming the kernel by using a sol-gel process are:

1) Dry fine powders, which are a major concern for the safety, yield, and maintenance of the processing facility, are not handled. Only liquids and free-flowing solids that are easily conveyed pneumatically are involved.

2) There is a higher probability that radionuclides will be incorporated into their proper ceramic phase and that higher density will be obtained, because the scale of mixing of a sol is superior to that achievable with dry powder.

3) Nearly full-density kernels should be obtained by pressureless sintering at temperatures 200 to 400°C below the 1100 to 1300°C firing temperatures required for the other ceramic forms. Lower formation temperatures will help to reduce the vaporization of volatile radionuclides to the off-gas system.

4) Kernels made by sol-gel should be homogeneous and crack-free compared to spheres made by disc pelletization. Smooth surfaces will improve the coating properties and integrity of pyrolytic carbon coatings.

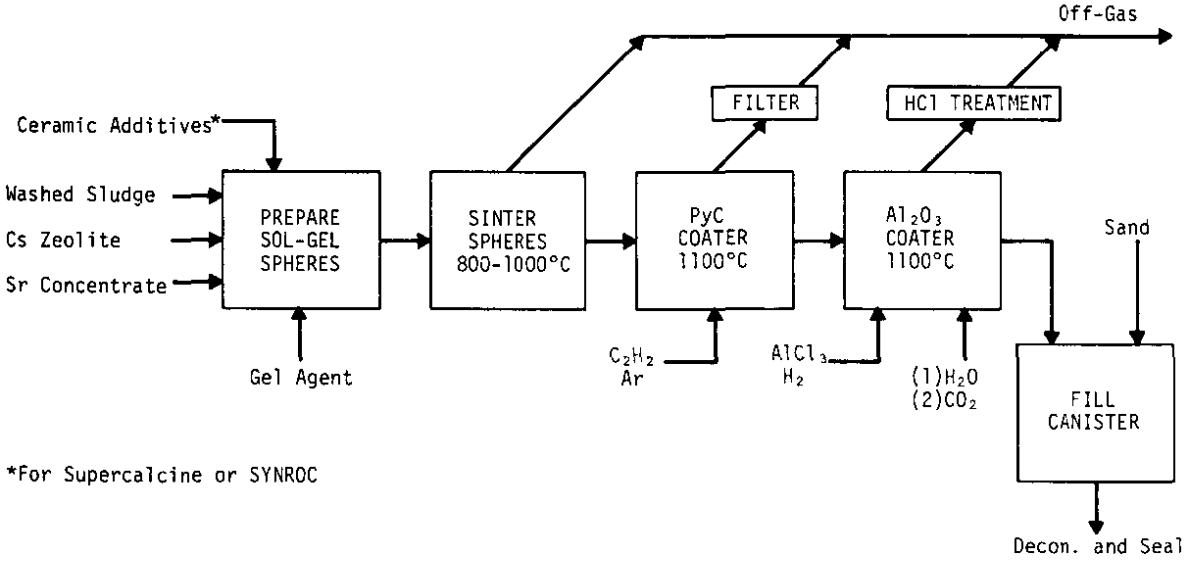

FIGURE A11.1. Coated Ceramic via Sol-Gel Process

Process Assumptions

The bases are generally the same as those described in Appendix A10. A sol-gel process has not been developed for SRP sludge.

Areas of Uncertainty

Preparation of stable sols from ceramic formers plus SRP sludge has not yet been demonstrated.

Whether the degree of mixing is improved and whether lower sintering temperatures are sufficient to obtain a good-quality product is uncertain, because much of the waste contains particles of >5 μm diameter.

Handling of the 400 to 900 μm sand, coal, and zeolite will be a problem, because they cannot be gelled without prior comminution.

Complexity of the Process

This ceramic-forming process and equipment are relatively simple. No fine powders or hot presses are required. Sol-gel processing is adaptable to almost any material that can be suspended.

State of Development

This process has not been demonstrated on any scale with any kind of nuclear waste, real or simulated. However, prior work (primarily at ORNL) has shown that a diverse variety of materials can be treated by the sol-gel process and then sintered into dense ceramic spheres. The status of development for coating technology is discussed in Appendix A10.

Quality Assurance

The ability to assure quality by destructive examination of typical production particles is an advantage of small coated particles over large monoliths.

Yield and Recycle

The yield from a sol-gel process is expected to be high. If a stable sol is produced, spherical kernels can be formed. If the

kernels are cracked after sintering, intrusion of overcoated carbon will tend to seal the exposed surface to minimize leachability.

Process Safety

This process has a reduced hazard to workers and equipment because no dry fine powders are handled, and process temperatures are low enough to prevent release of volatile radionuclides. In some cases, flammable organic extractant must be used. Other safety considerations are as described in Appendix A10.

Compatibility with SRP Waste

As discussed above, SRP sludge is nearly a sol, and hence the process is expected to accommodate all the solids in SRP sludge. Only the coarse sand, coal, and zeolite will require special handling.

Needs for Research, Development, and Scaleup Tests

The feasibility of a sol-gel process requires demonstration on SRP waste compositions and particle sizes to determine whether a sol can be obtained including ceramic components. A determination of the density-sintering temperature relationship is required to ascertain whether the expected lower consolidation temperatures and lower vaporization of volatile radionuclides are obtained. Leach tests are required for confirmation. A production process can be developed if these research areas are successful. The research and development requirements for coating are described in Appendix A10.

Bibliography

W. J. Lackey, R. E. Blanco, and A. L. Lotts. "Application of Sol-Gel Technology to Fixation of Nuclear Reactor Waste." Submitted to **Nuclear Technology** (1979).

W. J. Lackey and J. E. Selle, Compilers. "Assessment of Gel-Sphere-Pac Fuel for Fast Breeder Reactors." USDOE Report ORNL-5468, Oak Ridge National Laboratory, Oak Ridge, TN (1978).

J. M. Rusin, R. O. Lokken, J. M. Lukacs, K. R. Sump, M. F. Browning, and G. J. McCarthy. "Multibarrier Waste Forms, Part I: Development." USDOE Report PNL-2668-1, Pacific Northwest Laboratory, Richland, WA (1978).

APPENDIX B. CRITERIA FOR RATING WASTE FORMS

PRODUCT

Development Status

Waste Loading

Leachability

Long-Term Stability

Thermal Conductivity

Thermal Stability

Transportation Safety

PROCESS

Complexity

State of Development

Quality Assurance

Yield and Recycle

Process Safety

PRODUCT

Development Status

Rating	Criteria
5	Product made with radioactive waste and well characterized.
4	Product made with representative simulated waste and well characterized.
3	Small number of samples available and well characterized.
2	Samples available; ratings based on minimal characterization.
1	Conceptual product; ratings based on analogous experience.

Waste Loading

Rating	Criteria, Equivalent Oxide Loading, g/cm^3
5	$2 \leqslant L$
4	$1 \leqslant L < 2$
3	$0.5 \leqslant L < 1$
2	$0.25 \leqslant L < 0.5$
1	$L < 0.25$

Leachability (of form without damage by radiation, heat, transmutation, etc.)

Rating	Criteria
5	100X less than reference form
4	10X less than reference form
3	Approximately equal to reference form
2	10X more than reference form
1	100X more than reference form

Long-Term Stability (effects of radiation, transmutation, heat-induced physical changes, corrosion of form, and chemical or structural changes)

Rating	Criteria
5	Maintains original state and integrity
4	Changes state; moderate increase in leachability
3	Changes state; significant increase in leachability
2	Changes state; major increase in leachability
1	Fails and quickly releases contents

Thermal Properties

Conductivity

Rating	Criteria, Thermal Conductivity, Btu/(hr)(ft)(°F)
5	$100 \leqslant k$
4	$20 \leqslant k < 100$
3	$1 \leqslant k < 20$
2	$0.1 \leqslant k < 1$
1	$k < 0.1$

Stability (short term effects - within a day)

Rating	Criteria
5	Thermally stable to 800°C; emits no gases
4	Phase transition above 300°C; emits no gases
3	Unstable above 800°C; may emit gases
2	Unstable above 300°C; may emit gases
1	Unstable above 300°C; <u>will</u> emit gases

Transportation Safety (fire resistance, strength, friability, impact resistance, dispersibility)

Rating	Criteria
5	Superior in all factors
4	Superior fire resistance; some breakage upon impact
3	Melts or unstable at 800°C; perhaps some breakage upon impact
2	Melts or unstable at 500°C, or moderate breakage upon impact
1	Melts or unstable at 500°C, or high breakage upon impact

PROCESS

Complexity

Rating	Criteria
5	3 or less major steps; all processing temperatures <300°C; all pressures <10 atm
4	(Two of above)
3	(One of above)
2	(None of above)
1	

NOTE: Reduce rating one unit for more than 6 major steps.

State of Development (applicable large-scale experience)

Rating	Criteria
5	Industrial experience on similar product, and radioactive pilot plant
4	Industrial experience on similar product, or radioactive pilot plant
3	Nonradioactive pilot plant
2	Small-scale experience only
1	Conceptual process

Quality Assurance

Rating	Criteria
5	Representative sample easily secured; analytical work plant-routine
4	
3	(One of above)
2	
1	(Neither of above)

NOTE: Reduce rating by one unit when secondary containment is integral part of form. Example: bond between glass marbles and metal matrix must be assured.

Yield and Recycle (rework capability)

Rating	Criteria
5	Product re-enters feed stream without preparation
4	Easy preparation step required
3	Moderate preparation required
2	Difficult preparation (Example: grinding to <10 μm)
1	Multiple difficult preparation steps

Process Safety (including personnel exposure to radiation)

Reduce rating from 5 by one unit for each of the following conditions:

- Hands-on operations required during operation and/or abnormally large maintenance on contaminated equipment.
- Presence of radioactive powdered materials.
- Flammable gas required by process.