663572

DP-1136

35

ØL/000-0307-92-201

AEC RESEARCH AND DEVELOPMENT REPORT

TRANSFER OF RADIOACTIVE SLURRIES

C. B. GOODLETT

SRL
RECORD COPY

DU PONT
REG. U. S. PAT. OFF.

Savannah River Laboratory

Aiken, South Carolina

LEGAL NOTICE

This report was prepared as an account of Government sponsored work. Neither the United States, nor the Commission, nor any person acting on behalf of the Commission:

A. Makes any warranty or representation, expressed or implied, with respect to the accuracy, completeness, or usefulness of the information contained in this report, or that the use of any information, apparatus, method, or process disclosed in this report may not infringe privately owned rights; or

B. Assumes any liabilities with respect to the use of, or for damages resulting from the use of any information, apparatus, method, or process disclosed in this report.

As used in the above, "person acting on behalf of the Commission" includes any employee or contractor of the Commission, or employee of such contractor, to the extent that such employee or contractor of the Commission, or employee of such contractor prepares, disseminates, or provides access to, any information pursuant to his employment or contract with the Commission, or his employment with such contractor.

Printed in the United States of America
Available from
Clearinghouse for Federal Scientific and Technical Information
National Bureau of Standards, U. S. Department of Commerce
Springfield, Virginia 22151
Price: Printed Copy $3.00; Microfiche $0.65

663572

DP-1136

Waste Disposal and Processing
(TID-4500)

TRANSFER OF RADIOACTIVE SLURRIES

by

Claude B. Goodlett

Approved by

D. S. Webster, Research Manager
Separations Engineering Division

June 1968

E. I. DU PONT DE NEMOURS & COMPANY
SAVANNAH RIVER LABORATORY
AIKEN, S. C. 29801

CONTRACT AT(07-2)-1 WITH THE
UNITED STATES ATOMIC ENERGY COMMISSION

ABSTRACT

Slurries of radioactive waste carrying up to 20 vol % undissolved solids can be pumped through extensive horizontal runs of 2-inch pipe, if the bulk velocity is at least 1.6 ft/sec. A vertical submerged pump with an overhung shaft and a special casing is used.

CONTENTS

	Page
LIST OF FIGURES	4
INTRODUCTION	5
SUMMARY	8
EQUIPMENT DESCRIPTION AND TEST PROCEDURES	8
PILOT SCALE TRANSFER LOOP	10
PLANT SCALE TRANSFER LOOP	10
Pumps	12
Valves	14
STEAM LIFT	15
SIMULATED PROCESS SOLUTIONS	17
TEST RESULTS	18
PILOT SCALE TRANSFER LOOP	18
PLANT SCALE TRANSFER LOOP	19
Pumps	21
Valves	24
STEAM LIFT	27
PLANT OPERATION	31
BIBLIOGRAPHY	35

LIST OF FIGURES

Figure		Page
1	Cooled Storage Tank	5
2	Uncooled Storage Tank	6
3	Tank Farm Evaporator	7
4	Proposed Plant Concentrate Transfer System	9
5	Waste Transfer Test Loop - 1-inch Pipe	10
6	Waste Transfer Test Loop - 2-inch Pipe	11
7	Waste Pump	12
8	Modified Pump Casing for Waste Pump	13
9	Grinnell-Saunders Diaphragm Valve	14
10	Flush-Bottom Tank Valve	15
11	Steam Lift Test Facility	16
12	Physical Properties of Average Purex Supernate	17
13	Viscosity of Average Purex Supernate	18
14	Pluggage of 1-inch-Pipe Test Facility	19
15	Pressure Drop in Transfer Loop	20
16	Discharge Head and Power Versus Flow for Constant Speed Pump	21
17	Discharge Head Versus Flow for Variable Speed Pump	23
18	Pump Speed Versus Input Power for Variable Speed Pump	23
19	Input Power Versus Flow for Variable Speed Pump	24
20	"Teflon" Diaphragms for 1-inch Grinnell-Saunders Valve	25
21	Ethylene-Propylene Rubber Diaphragm for 1-inch Grinnell-Saunders Valve	25
22	Loop Pressure Versus Drawoff Rate	26
23	Characteristics of Steam Lift	27
24	Steam Lift After Removal from Vessel	28
25	Solution in Vessel Before Draining	29
26	Vessel After Draining	30
27	Plant Concentrate Transfer System	31

INTRODUCTION

At the Savannah River Plant (SRP) the liquid waste from processing radioactive fuel elements is stored as alkaline solutions with dissolved solids content of 30-35 wt % in carbon steel underground tanks of 3/4 to 1-1/3 million gallon capacity.[1] The stored wastes are: "high level waste" which contains sufficient radioactive fission products to generate decay heat at 0.5 to 5 Btu/(hr)(gal); and "low level waste" whose fission product content is only 1/1000 to 1/100,000 that of the high level waste, but still too high to discard to a seepage pond or to streams and rivers. The low level waste contains principally sodium aluminate from the caustic dissolution of the aluminum jackets of the irradiated fuel elements. The high level waste, principally sodium nitrate with some sulfate and carbonate, contains the residues from the dissolving, solvent extraction, and ion exchange operations. Both wastes separate into a sludge layer and a relatively clear supernatant liquid in the storage tanks.

Cost is reduced in the long-term storage of radioactive waste solutions at SRP by transferring supernatant liquid wastes (after decay of the short-lived fission products) from storage tanks containing cooling coils (Fig. 1) to less expensive uncooled tanks (Fig. 2). The tanks with coils are then reused for fresh waste.

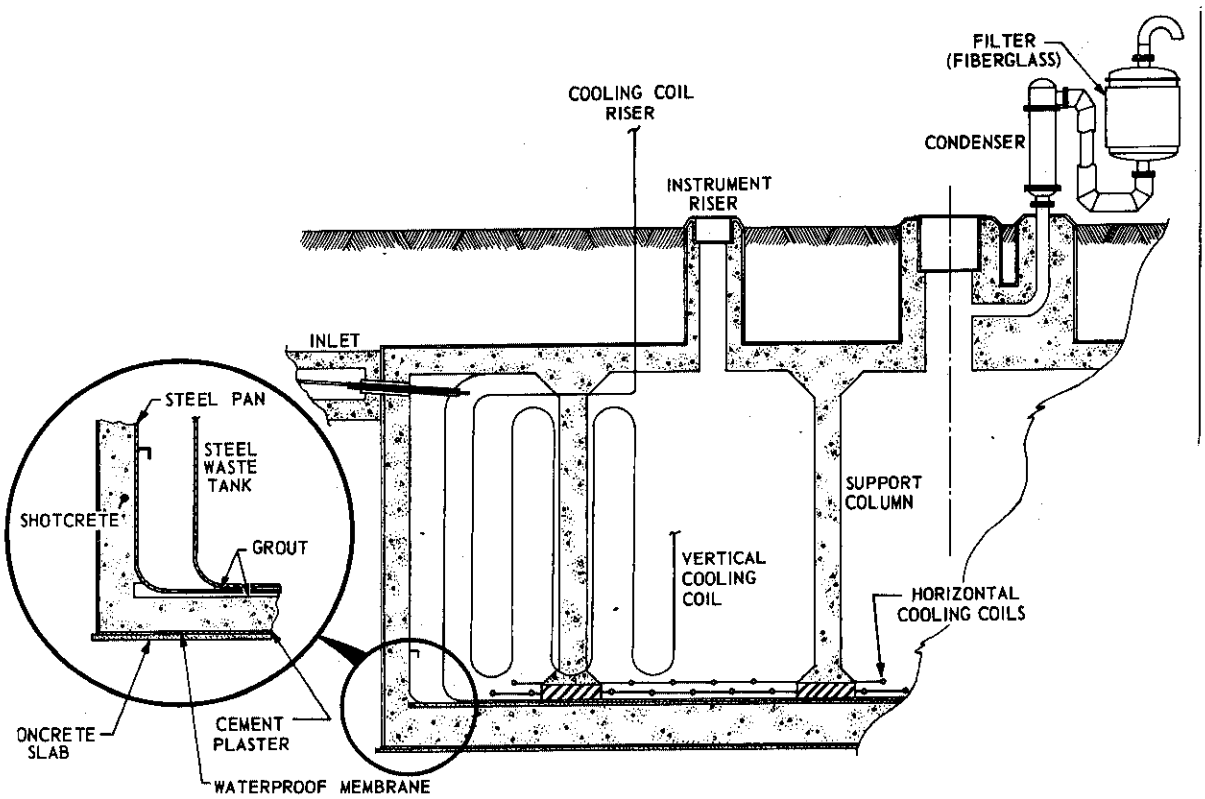

FIG. 1 COOLED STORAGE TANK (750,000 gallons, 75-ft diameter)

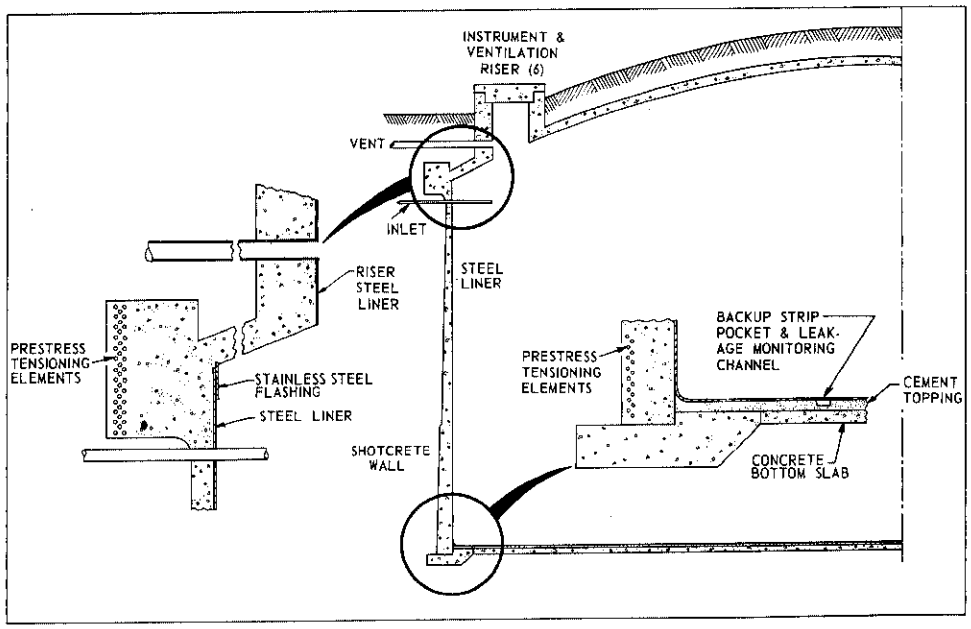

FIG. 2 UNCOOLED STORAGE TANK (1,300,000 gallons, 85-ft diameter)

Recent tests at the Savannah River Laboratory[2] have shown that the aged supernatant liquid waste can be reduced by one or more successive evaporations to an amorphous solid with practically no free water. This concentration significantly reduces the probability that the contained radioactivity might be inadvertently released, and also reduces the volume and the storage cost to 1/2 or 1/3 the present figure. Solidification of the concentrated aged supernate is a principal objective of the SRP waste storage program. General information on the interim handling of liquid radioactive wastes and on the removal of sludge from tanks has been reported previously.[3,4]

An evaporator, shown in Fig. 3, was installed in F Area in 1960 and in H Area in 1963. Each evaporator, centrally located to four large uncooled storage tanks, has operated satisfactorily since installation. The need for additional storage space for salt cake raised the question as to whether the evaporators could be used with more distant tanks, some of which are at a higher elevation than the evaporator. The evaporators were designed originally to concentrate the supernatant solution from ~35 to ~70 wt % "solids" (total solute plus solid phase); at present the concentrated waste is discharged by steam lift and flows by gravity to the uncooled tanks. Transfer of this slurry over distances of several hundred feet is required to utilize tanks other than the adjacent four.

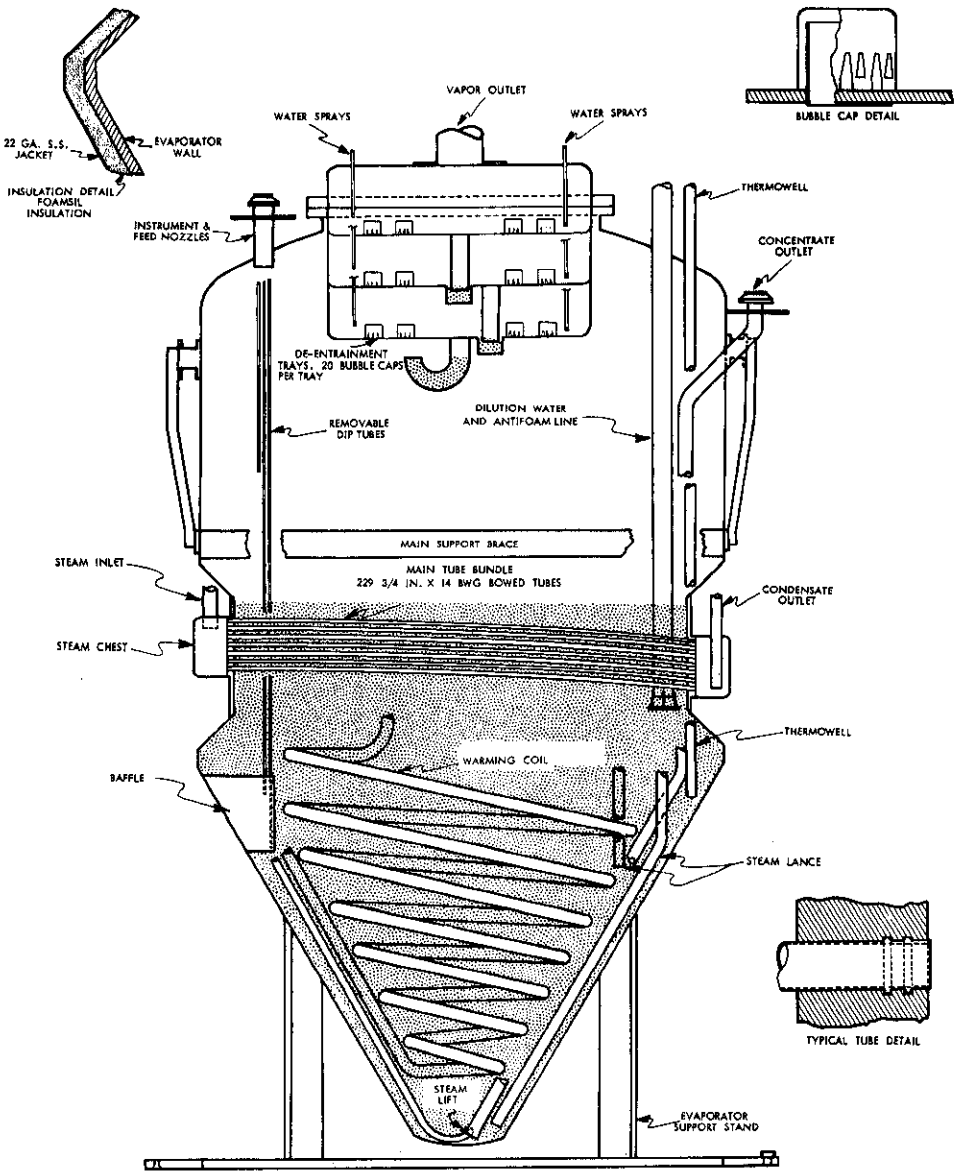

FIG. 3 TANK FARM EVAPORATOR (8-ft diameter)

Laboratory and pilot plant tests defined the physical properties of the waste and the hydraulic conditions required to transfer the concentrated wastes from the evaporators to the distant tanks without line pluggage. This report summarizes these data and discusses the operational tests of the plant equipment.

SUMMARY

A 2-inch transfer loop simulating a proposed plant waste transfer facility was successfully operated at the semiworks. Nonradioactive synthetic waste slurries containing at least 20 vol % undissolved solids were transferred satisfactorily, provided the bulk velocity was at least 1.6 ft/sec; both the waste pump and the drawoff valve selected for use in the transfer system gave satisfactory service.

Test of a mockup of the steam lift originally installed in the tank farm evaporator showed that: (1) the pumping rate of the lift was not greatly affected by changes in the waste concentration, (2) the steam lift operated satisfactorily at rates of 11 to 32 gpm, and (3) the steam lift failed when the total (dissolved and nondissolved) solids content exceeded ~75 wt %.

Following these tests with synthetic waste, a concentrate transfer loop was installed in the plant to transfer aged alkaline waste (after concentration in the tank farm evaporator) to four distant underground waste storage tanks with a circulation velocity of 3 to 5 ft/sec; two or three times the velocity corresponding to the onset of pluggage. This system has operated satisfactorily on full-level radioactive waste since startup in July 1967.

EQUIPMENT DESCRIPTION AND TEST PROCEDURES

To transfer solids-bearing concentrated waste, the flow rate must be sufficient to keep all segments of the pipe full; to ensure against settling of the precipitated material, the velocity, as recommended in the literature, should be about 3 ft/sec for a 2-inch pipe. In addition, the heat loss should be small. The minimum pipe diameter needed to prevent pluggage by solid particles in this particular waste stream, and that would provide sufficient volumetric flow to prevent a large decrease in the waste temperature, proved to be 2 inches. However, the required volumetric flow in a 2-inch pipe is at least 20 gpm, or about six times the average rate at which concentrate is produced by the evaporator. The proposed method for matching flow rates from the evaporator with the rate in the circulating loop is illustrated in Fig. 4.

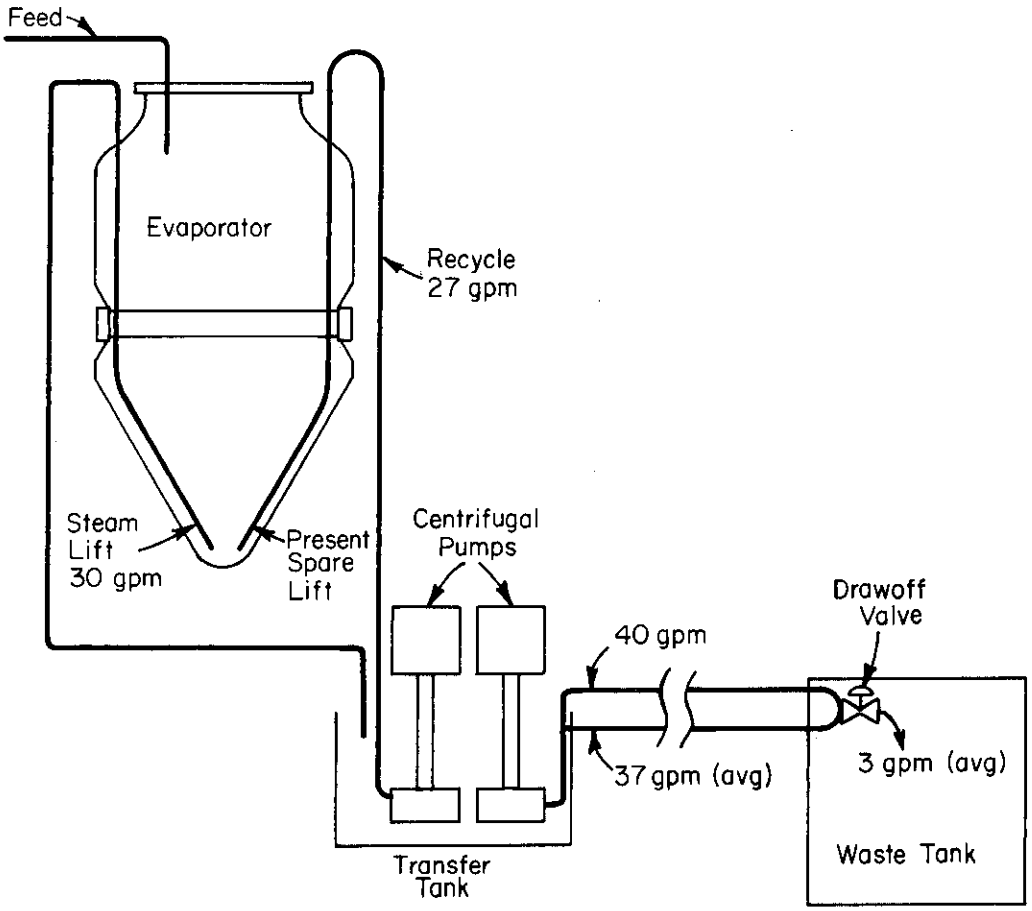

FIG. 4 PROPOSED PLANT CONCENTRATE TRANSFER SYSTEM (2-inch pipe)

The concentrated waste is transferred by steam lift from the present evaporator to a pump tank. The steam lift is operated at maximum flow to prevent plugging, and the excess of waste removed relative to the volume being produced in the evaporator is returned to the evaporator by a variable speed pump. The concentrate is simultaneously recirculated by a constant speed pump between the pump tank and the waste storage tanks through an insulated loop of 2-inch pipe, at velocities between 3 and 5 ft/sec (30 to 50 gpm). An average flow, equal to the concentrate produced by the evaporator (about 3 gpm), is diverted from the loop to one of four waste storage tanks through a drawoff valve.

Both pilot and full-scale equipment was assembled and operated at the semiworks to study the flow characteristics of the waste in the various components of the proposed system.

PILOT SCALE TRANSFER LOOP

A pilot scale transfer loop (Fig. 5) of 1-inch pipe was used to define the permissible extent of evaporation, the effect of cooling in the transfer lines, and the flow velocity required to avoid pluggage. This loop had a steam-jacketed, 10-inch section of pipe as the evaporator, and a gear pump to transfer the waste through ~250 feet of insulated 1-inch pipe.

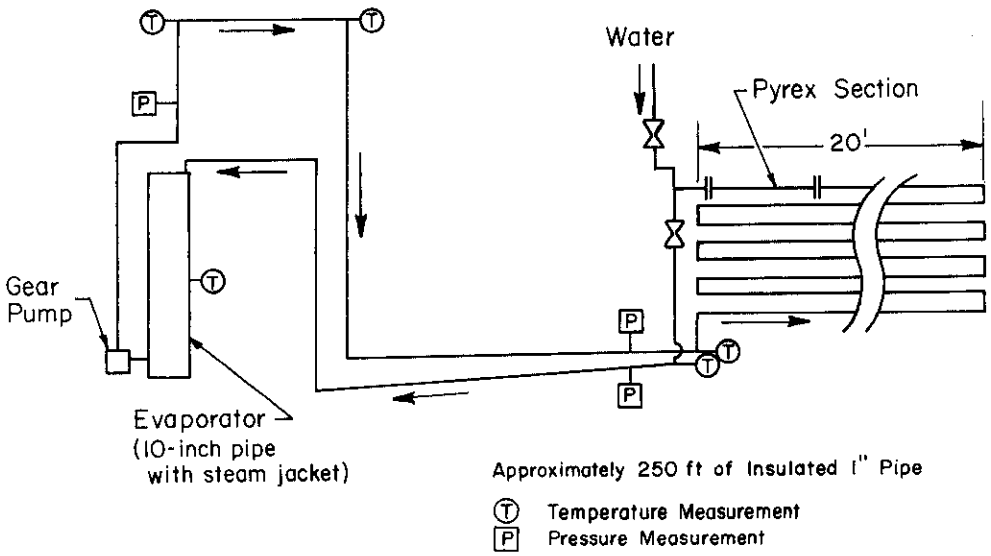

FIG. 5 WASTE TRANSFER TEST LOOP (1-inch pipe)

PLANT SCALE TRANSFER LOOP

Based on successful results obtained with the pilot scale transfer loop, a second transfer loop simulating the proposed plant facility was installed at the semiworks to confirm the proposed design. This loop, shown in Fig. 6, had a submerged pump, 2-inch transfer lines, diaphragm valves to simulate pressure drop in the plant system, and an all metal drawoff valve.

The transfer loop used 2-inch carbon steel pipe covered with 1 inch of glass fiber insulation. A 24-inch section of 2-inch glass pipe permitted visual observation of the flowing waste. The 3-inch return line from the drawoff drum to the pump tank (Fig. 6) also contained a section of glass pipe to allow observation of flow leaving the drawoff valve.

The 8-ft by 4-ft by 5-ft-high rectangular, stainless steel waste pump tank was equipped with two agitators with a combined power input of 3.5 hp. Steam coils maintained the 825 gallons of solution in the tank at 10°C below the boiling point of the solution.

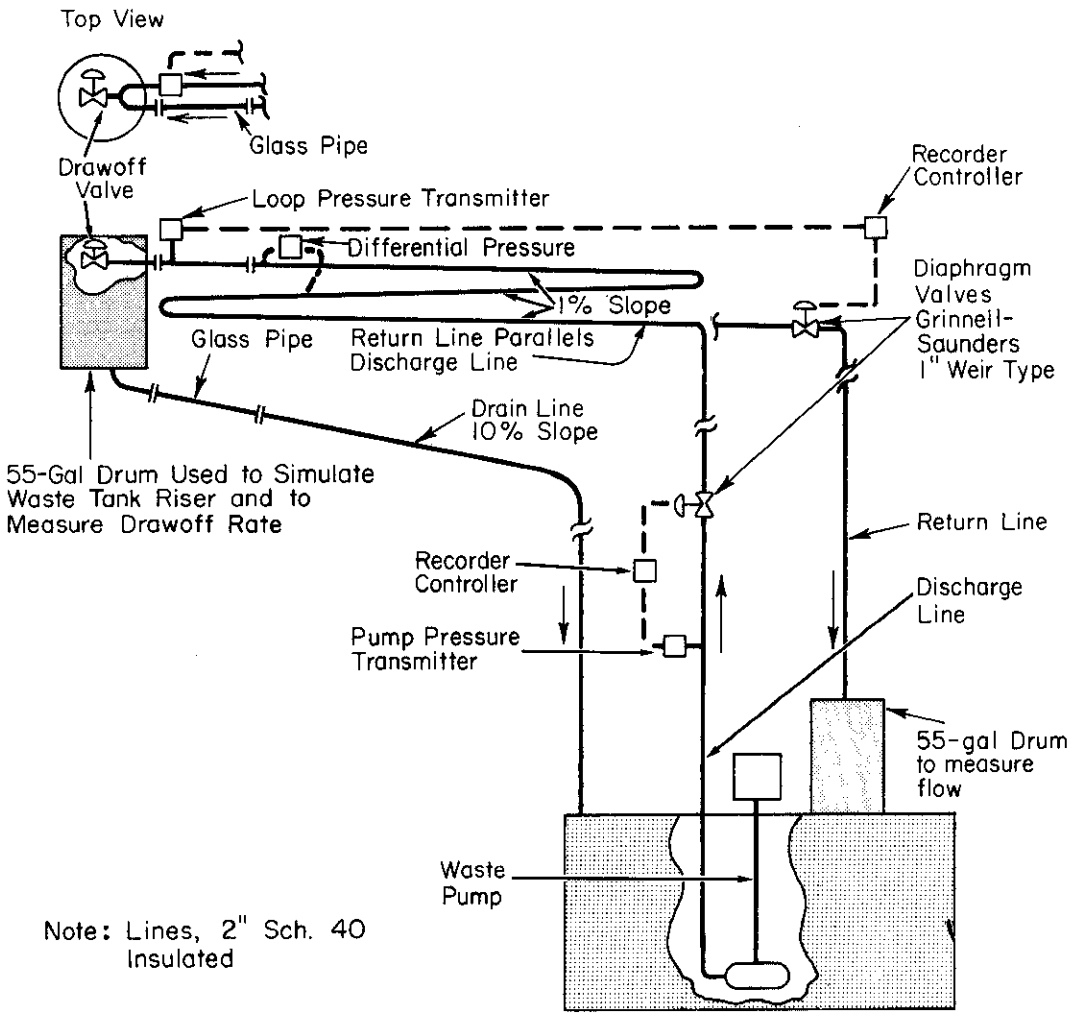

FIG. 6 WASTE TRANSFER TEST LOOP (2-inch pipe)

Pressure-sensing and control instrumentation was provided on the waste transfer loop at several points: (1) The pump discharge pressure controlled flow from the pump by operation of a diaphragm control valve in the pump discharge (steam was used as the pressure-transmitting fluid). (2) Pressure control in the loop immediately upstream from the drawoff valve was maintained by operation of a diaphragm control valve on the return line (steam was used to transmit pressure). (3) The pressure drop over a 36-ft length of 2-inch pipe was recorded; here the pressure-transmitting fluid was water, bled in at 0.02 gpm. (4) Differential pressure between two dip tubes in the waste pump tank indicated specific gravity. Air was used to transmit pressure in this application; however, frequent pluggage would have been eliminated if either water or steam had been used.

Pumps

The waste pump (Fig. 7), manufactured by Barrett, Haentgens, and Company, is similar to the pumps used in fuel reprocessing operations at SRP. The pump is submerged with vertical overhung shaft. The impeller, about 5 ft below the pump bearings, is dynamically centered in the pump volute by the action of three discharge openings 120° apart. In the standard canyon pump, the fluid from the three discharge openings rises 4.5 ft via three pipes into a collection ring, where it is combined into a single stream.

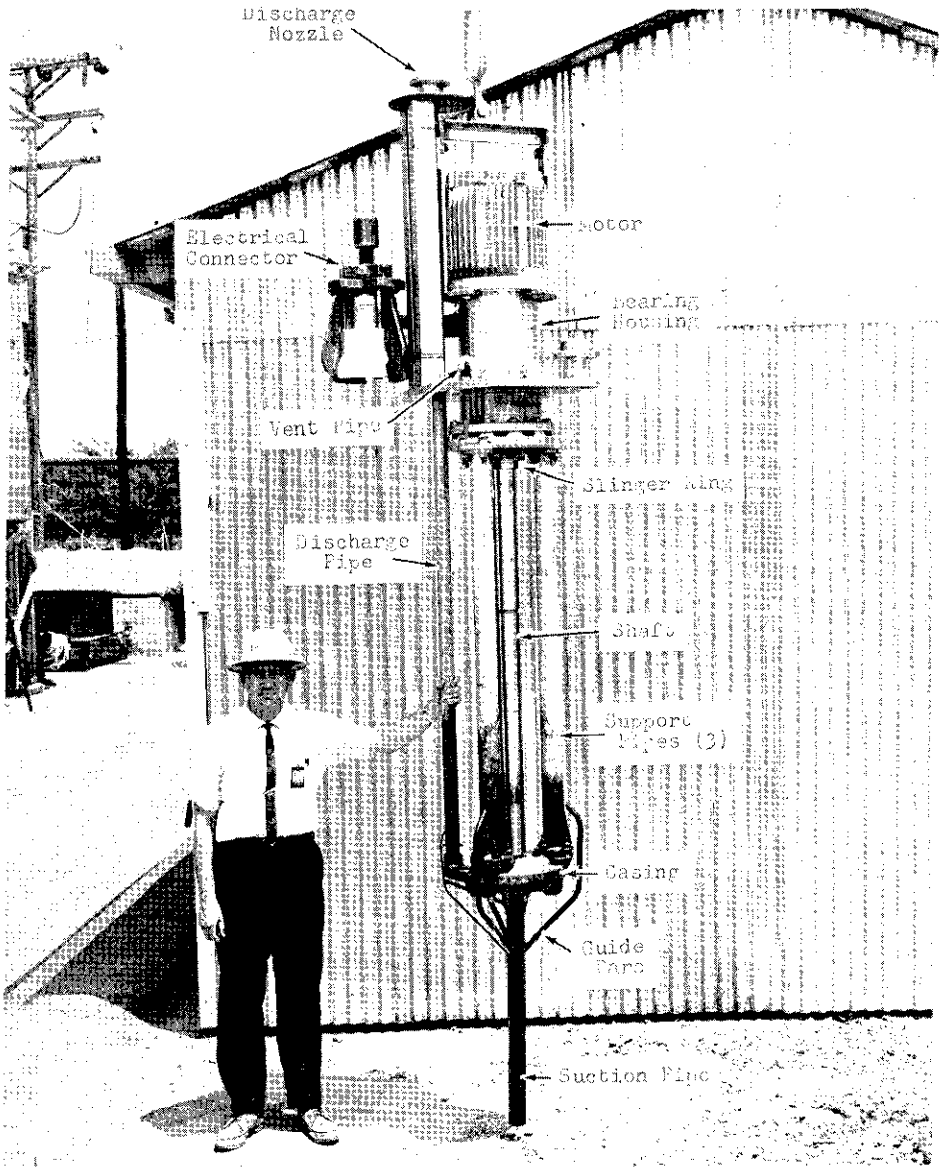

FIG. 7 WASTE PUMP

During the waste tests, pluggage was prevented by moving the collector ring down into the casing and by using a single small diameter pipe for discharge from the collector ring (Fig. 8). The original three pipes now only supported the casing.

Three identical pumps were purchased (one as a spare) for the plant facility. A constant speed motor was supplied for the pump in the waste transfer loop, and variable speed (high slip) motors were supplied for the pump in the evaporator loop and for the spare.

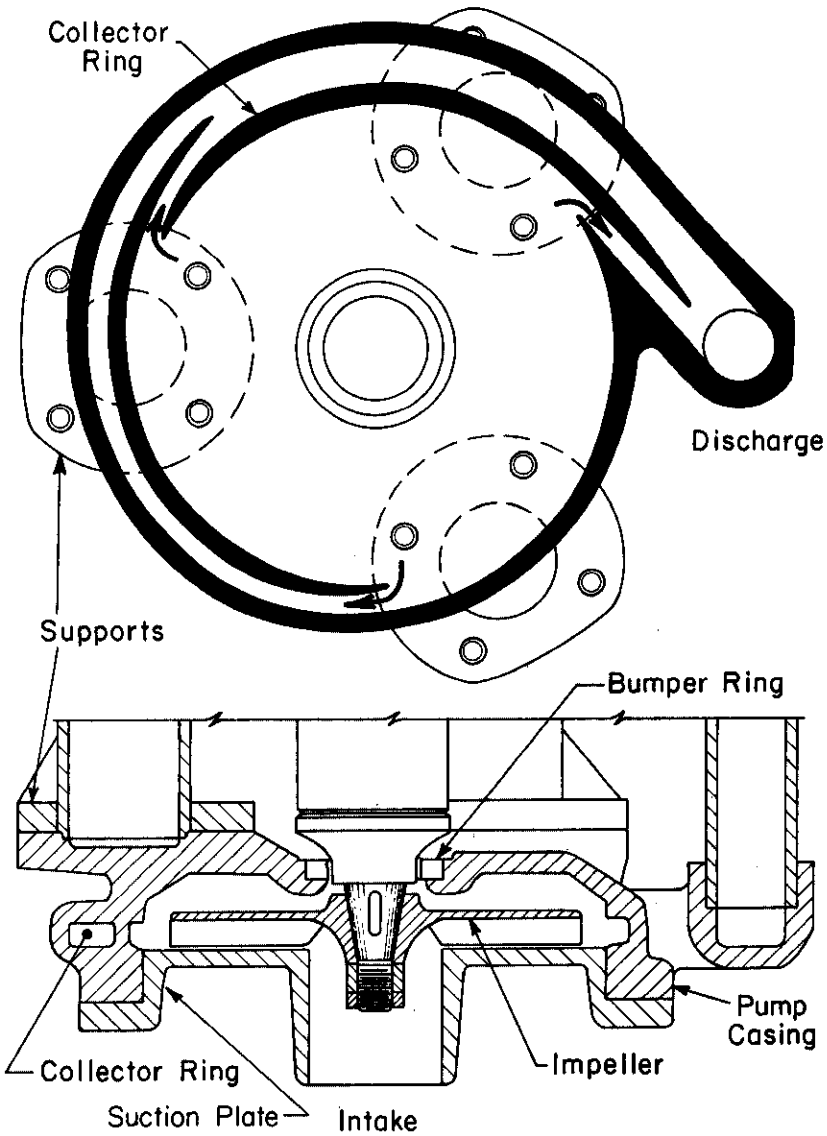

FIG. 8 MODIFIED PUMP CASING FOR WASTE PUMP

The pumps were characterized on water and various concentrations of synthetic waste solution during the test program. The following variables were measured:

Solution Temperature: measured at the pump suction.

Discharge Head: measured with a pressure gage and corrected for solution specific gravity and height of gage above the liquid surface.

Flow: time required to collect a given volume in drum.

Voltage:
Amperage:
Power Factor:
Power:

These measurements were made with an electrical power analyzer and were internally consistent; to simplify presentation only voltage and power are reported.

Pump Speed: measured with a stroboscopic light.

Temperature Rise of Motor: thermocouple on outside of motor housing.

Cavitation: indicated by abrupt drop in flow and power.

Valves

Originally, Grinnell-Saunders diaphragm valves (Fig. 9) were installed in the waste transfer loop: one-inch valves in the 2-inch line were used for throttling, and a 1/2-inch valve was used for drawoff. The 1-inch valves were required to control pressures and flows in the test loop and are not used in the plant installation.

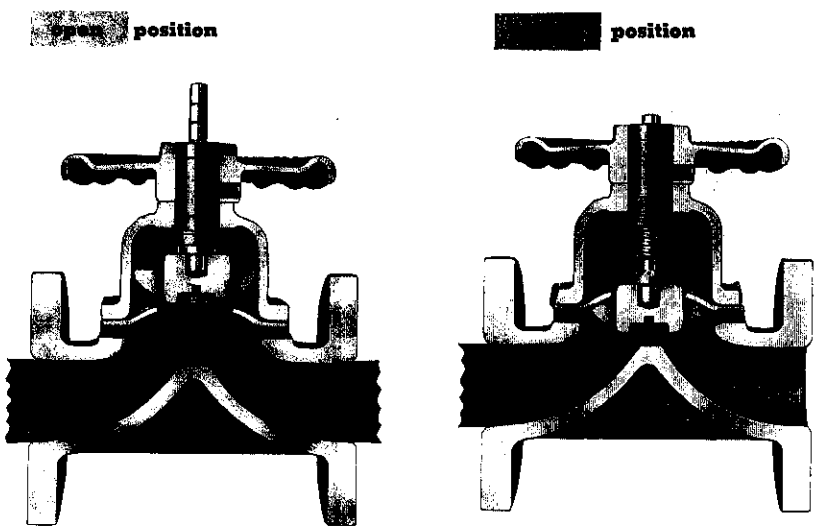

FIG. 9 GRINNELL-SAUNDERS DIAPHRAGM VALVE

Although tests showed that diaphragm valves would probably be usable in the plant loop, an all metal, flush-bottom tank valve was demonstrated in the test loop (Fig. 10). The valve seat is flush with the inside of the pipe, thus eliminating the usual stagnant volume between pipe and valve (which is susceptible to pluggage when waste is not being drawn off). The absence of wear on the pump impeller indicated that the metal valve parts would wear well in plant service.

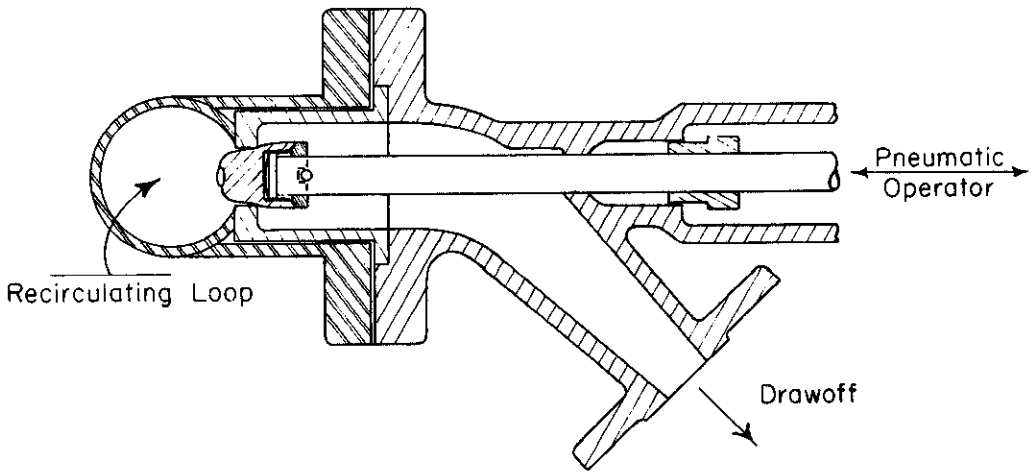

FIG. 10 FLUSH-BOTTOM TANK VALVE

STEAM LIFT

The steam lift installed in the tank farm evaporator is part of the system for transferring radioactive slurries; therefore, a full-scale mockup of the steam lift was tested in the facility shown in Fig. 11. The level of waste in the test vessel was maintained 105 inches above the bottom of the steam lift, as in normal plant operation.

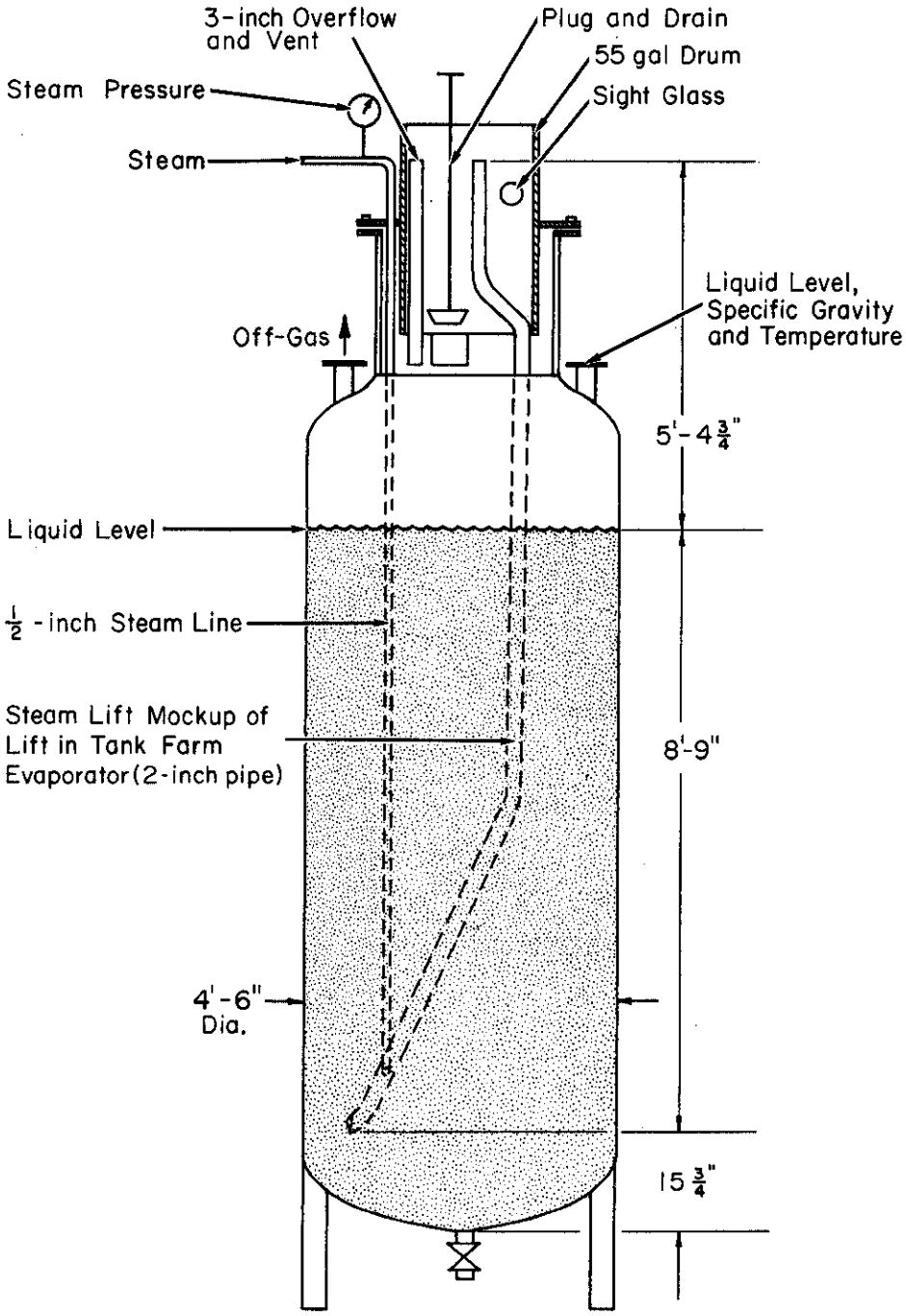

FIG. 11 STEAM LIFT TEST FACILITY

SIMULATED PROCESS SOLUTIONS

The "high-nitrate" type of waste[2] ($NaNO_3$, Na_2CO_3, Na_2SO_4, NaOH) was tested, but the 0.5M $NaAlO_2$ was deleted for ease of feed makeup. The physical properties of this waste are shown in Fig. 12 and 13 (boildown ratio is the feed volume at 25°C divided by the concentrate volume at the boiling point).

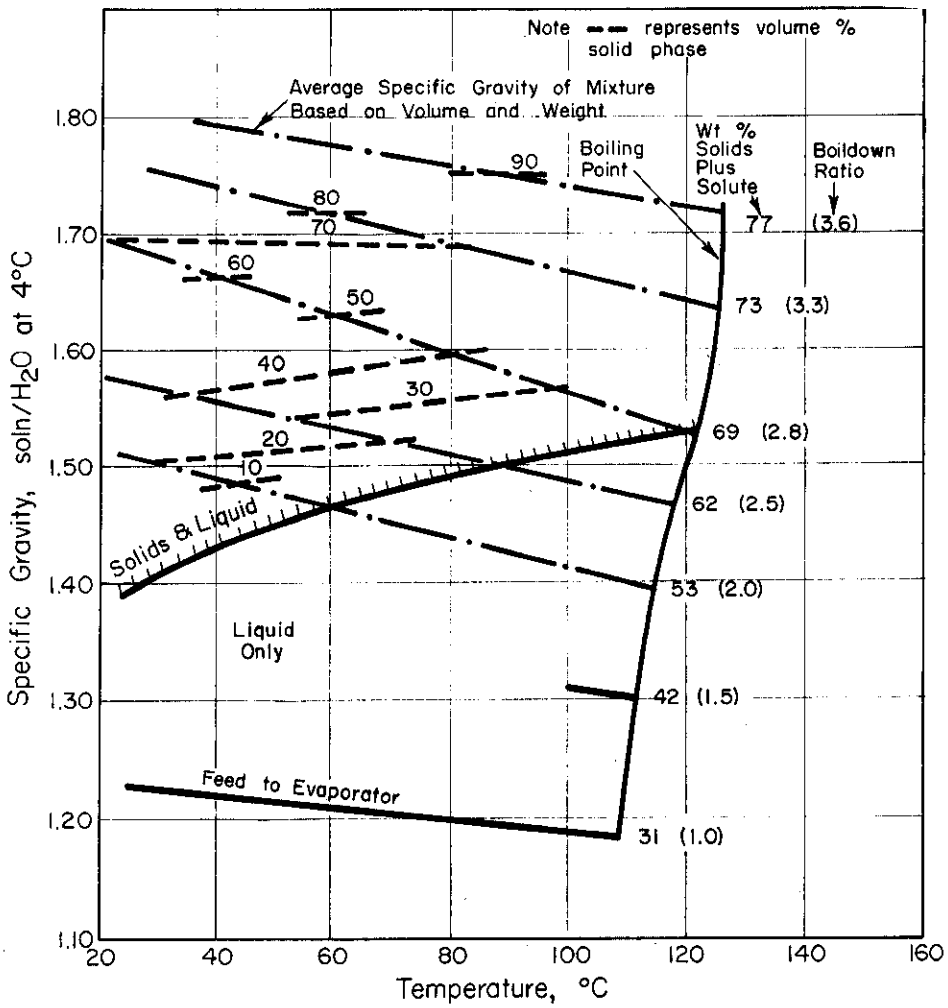

FIG. 12 PHYSICAL PROPERTIES OF AVERAGE PUREX SUPERNATE

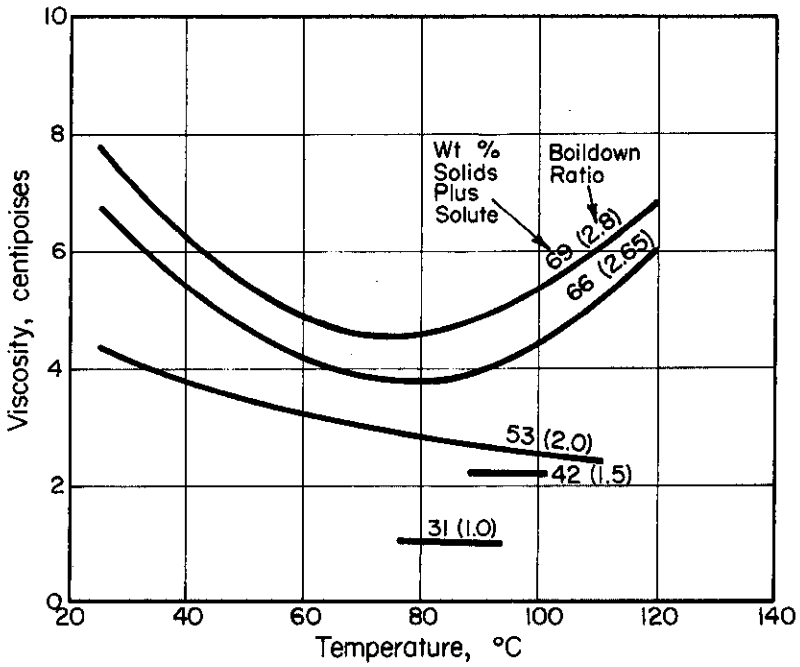

FIG. 13 VISCOSITY OF AVERAGE PUREX SUPERNATE

TEST RESULTS

PILOT SCALE TRANSFER LOOP

Data from the initial 1-inch-pipe test loop are summarized in Fig. 14. Waste solution can be transferred at velocities as low as 1.4 ft/sec in a 1-inch line, if the undissolved solids concentration is <60-70 wt %. Flow velocities lower than ~1.4 ft/sec permitted settling of the solids in the line. This critical-deposit velocity agrees with the value of ~2 ft/sec reported in the literature[5-7] for a 1-inch pipe using densities comparable to the waste solid and transport media, and the viscosity of water (normally 1 centipoise). The quantitative effect of viscosity was not in the literature; however, settling tests in the laboratory at room temperature showed that the discrepancy between the observed velocity of ~1.4 ft/sec and the reported value of ~2.0 ft/sec can probably be attributed to the high viscosity of the waste concentrate (Fig. 13), which at a boildown ratio of 2.8 is 7 centipoises at 23°C.

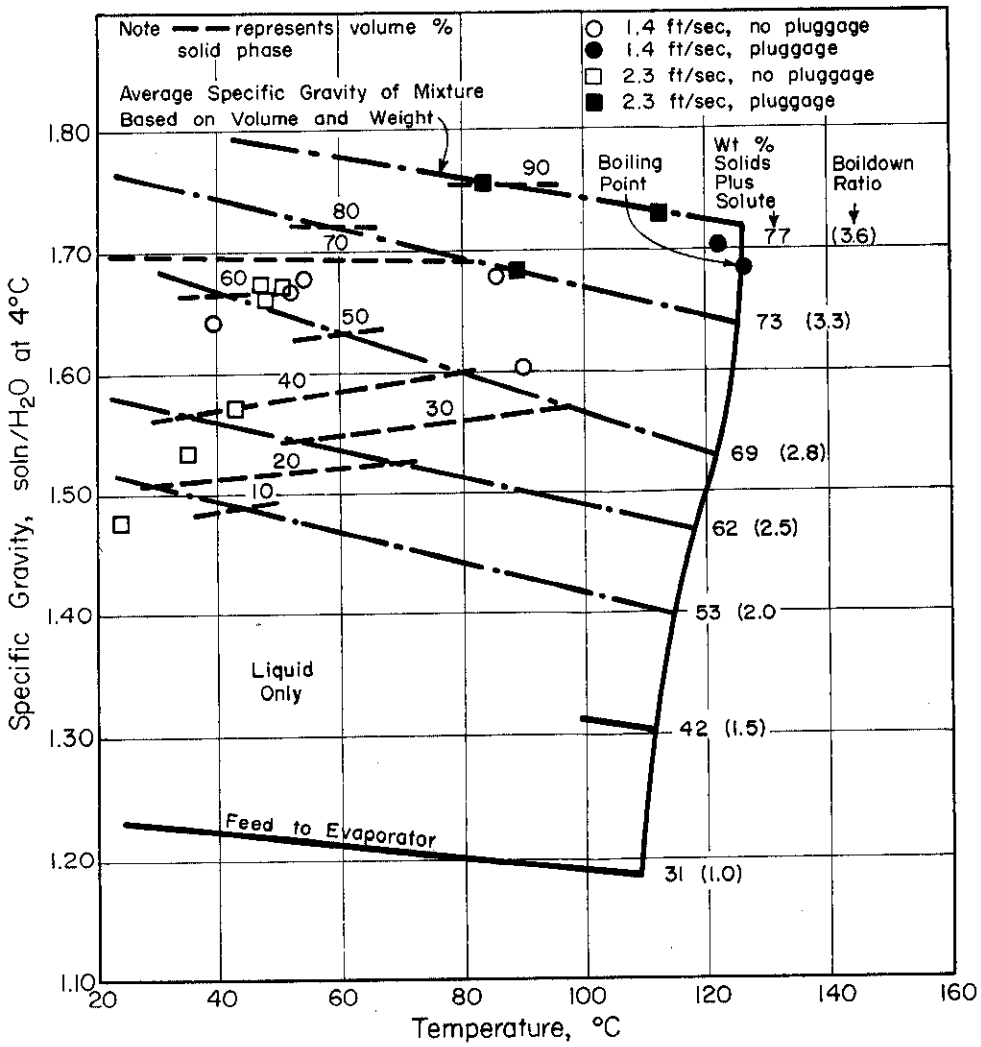

FIG. 14 PLUGGAGE OF 1-INCH-PIPE TEST FACILITY

PLANT SCALE TRANSFER LOOP

Operation with the high nitrate waste demonstrated that solutions containing at least 20 vol % undissolved solids can be successfully pumped through the waste loop. Visual observation of the solution flowing through the 2-inch glass pipe showed settling of the solids when flow rates were lower than about 16 gal/min (1.6 ft/sec). This observed critical-deposit velocity is not much greater than the critical velocity observed in the 1-inch test loop (1.4 ft/sec), although in theory the deposition velocity should vary as the square root of the pipe diameter.

The discrepancy is probably due to the smaller-size particles in the 2-inch loop that resulted from attrition while the loop was operated as a continuously recirculating system over extended periods; the 1-inch loop was operated for periods of only 1 to 2 days.

Measured pressure drop at various rates of flow across a 36-ft section of 2-inch pipe is shown in Fig. 15. The pressure drop is unaccountably lower than that calculated from the viscosity and density of the waste solutions.

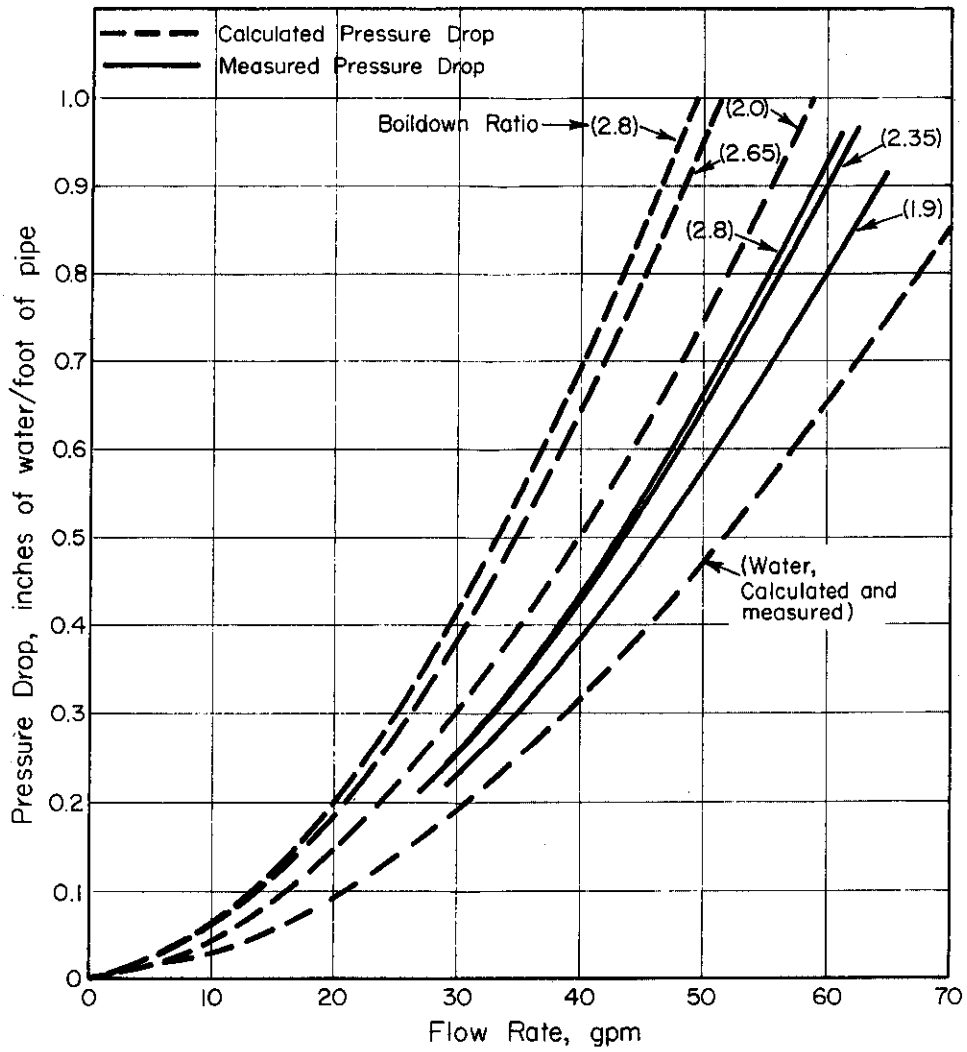

FIG. 15 PRESSURE DROP IN TRANSFER LOOP
(36-feet of 2-inch pipe, differential pressure measured as shown in Fig. 6)

Pumps

Initial tests with the pump showed that movement of slurries through the three parallel discharge lines caused an unstable condition in which one line became plugged and the resulting unsymmetrical discharge deflected the pump shaft against the pump casing. This problem was resolved by bringing the collector ring down into the casing. The pump impeller was weighed and measured before the tests were started, and again after 380, 570, and 1550 hours of operation; no wear was observed.

During tests of the pumps for the plant facility, the three pipes that support the pump casing partially filled with the synthetic waste solution. Because this would trap radioactive solutions and hinder maintenance operations in the plant, the pumps were disassembled and the joints of the support pipes were gasketed to prevent in-leakage. Data obtained with both the constant speed and variable speed pumps are described below.

Constant Speed Pump

This pump was tested on both cold and hot (95°C) water, and on 1.4-fold and 2.7-fold evaporated synthetic waste solutions. The discharge head was varied by adjusting the valve in the discharge line. The discharge head (expressed as feet of solution) for this constant speed centrifugal pump is independent of the solution being pumped, as shown in Fig. 16. Measurements confirmed that the speed of the pump was practically constant for the conditions tested; the maximum range measured was 1700 to 1725 rpm, a variation within the error of measurement.

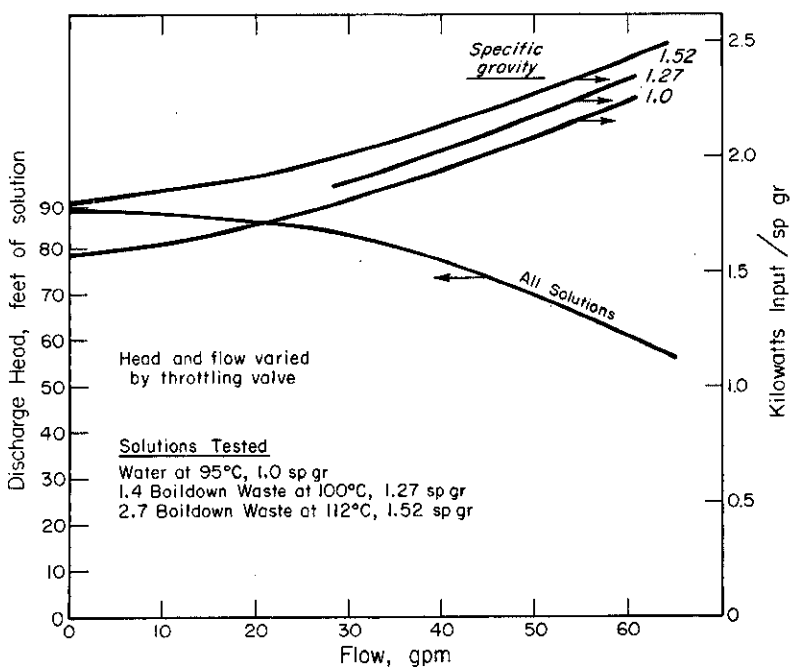

FIG. 16 DISCHARGE HEAD AND POWER VERSUS FLOW FOR CONSTANT SPEED PUMP

Because the required pumping power is approximately proportional to solution density, the observed power input was divided by the specific gravity of the solution before plotting against flow in Fig. 16. This compresses the data considerably, but does not completely eliminate the differences between solutions. The curves for kw/sp gr are identified by the specific gravity of the solution.

The measured temperature rise on the motor while pumping 2.7-fold boildown waste at 40 gpm was 35°C.

The pump was tested for cavitation while transferring concentrated waste (2.7 boildown) at 50 gpm. The pump began to cavitate (indicated by drop in flow and power) when the solution was within 1°C of its boiling point.

Variable Speed Pump

This pump was tested with both hot water and 1.4- and 2.8-fold boildown synthetic waste solutions. Pump characteristics were obtained at 460, 340, 220, and 160 volts by changing the setting of the discharge valve.

Fig. 17 shows that, at constant voltage, the pump discharge head decreases as the specific gravity of the solution being pumped increases. Because this pump is driven by a high slip motor (variable speed), higher specific gravities increase the load on the motor and reduce its speed. To simulate plant conditions where motor voltages will be varied to adjust pumping rate, tests were made at reduced voltages (340, 220, and 160 volts). These curves have the same characteristics as those obtained at full-rated voltage (460 volts). Fig. 18 shows the effect of reduced voltage on pump speed for the variable speed drive while pumping three solutions of different density. Because the required pumping power is approximately proportional to solution density, the observed power was again divided by specific gravity before plotting against speed, again to compress the data. Tests were made at reduced voltages (340, 220, and 160 volts) as well as full-rated voltage (460 volts). The power requirements at various flows, solutions, and voltages are shown in Fig. 19.

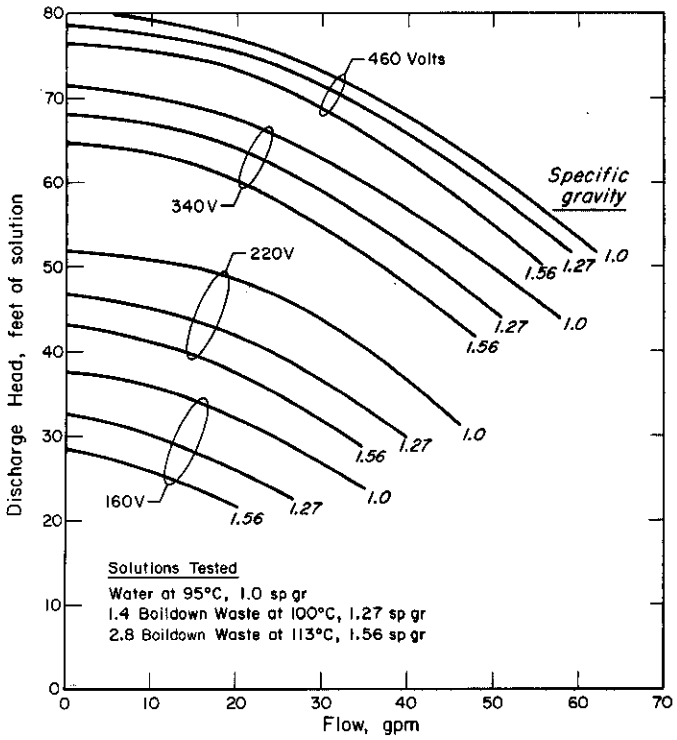

FIG. 17 DISCHARGE HEAD VERSUS FLOW FOR VARIABLE SPEED PUMP

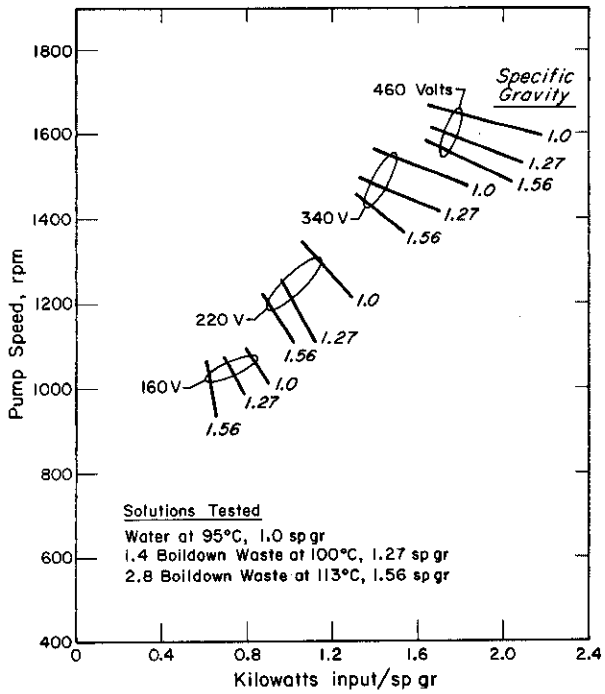

FIG. 18 PUMP SPEED VERSUS INPUT POWER FOR VARIABLE SPEED PUMP

Valves

The diaphragm valve that was installed originally in the test loop to control the pump discharge pressure produced a pressure drop of 15 to 25 psi; the drawoff valve and the loop pressure control valve produced pressure drops of 3 to 12 psi. Normal operating temperature was 100 to 111°C.

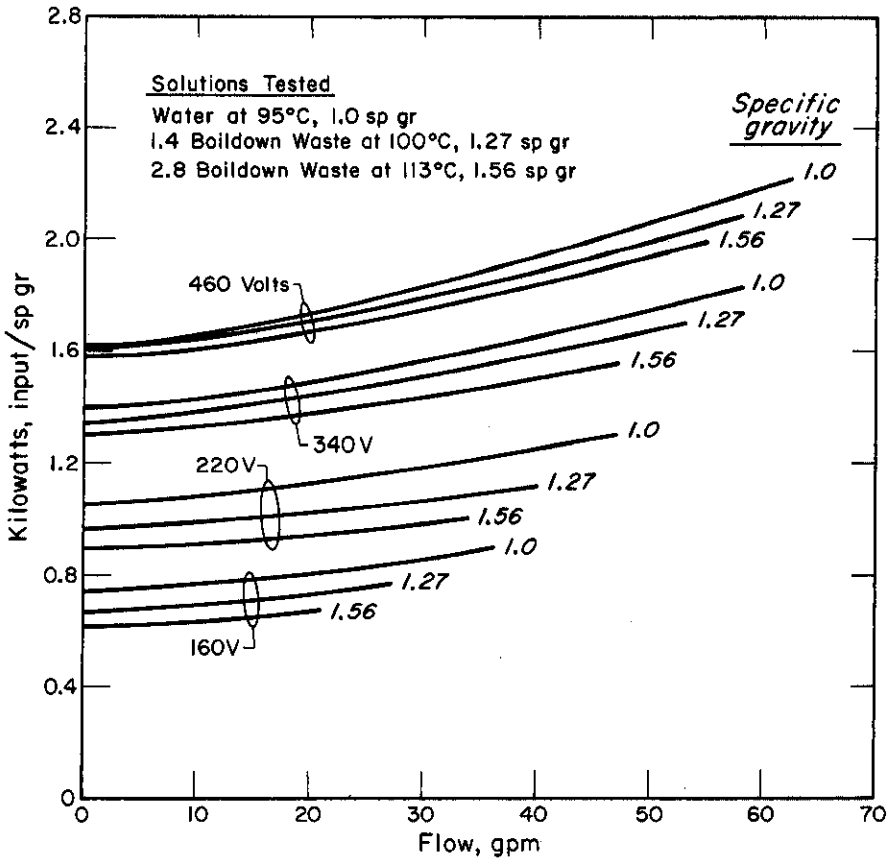

FIG. 19 INPUT POWER VERSUS FLOW FOR VARIABLE SPEED PUMP

The high operating temperature permitted the abrasive waste solids to cut through the "Teflon"* diaphragms. Successive diaphragms in the pump discharge valve failed after 270, 115, and 40 hours of service; whereas diaphragms in the loop pressure control valve failed after 790 and 1320 hours. The 1/2-inch drawoff valve was replaced with a 1-inch valve after 575 hours of service; the "Teflon" diaphragm in the 1/2-inch valve showed wear, but had not failed. A new and a failed 1-inch diaphragm are shown in Fig. 20.

Two high temperature butyl rubber diaphragms, recommended by the valve manufacturer, were unsatisfactory in pump discharge valve service. Although neither diaphragm failed completely, each was cut severely after operating 560 and 420 hours.

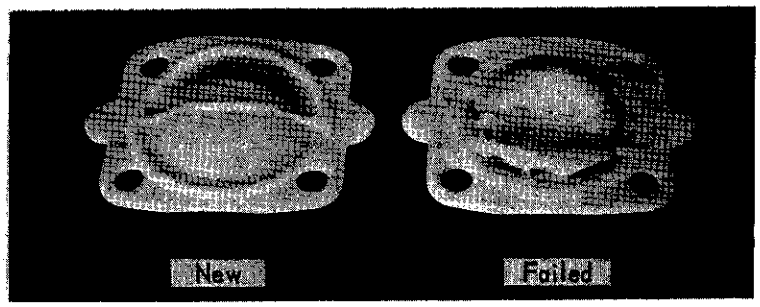

FIG. 20 "TEFLON" DIAPHRAGMS FOR 1-INCH GRINNELL-SAUNDERS VALVE

An experimental diaphragm of ethylene-propylene rubber, supplied by the valve manufacturer, was also cut severely in service. A photograph of this diaphragm after 370 hours of service is shown in Fig. 21.

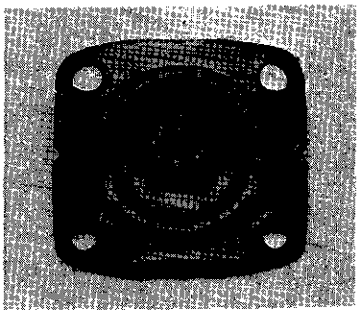

FIG. 21 ETHYLENE-PROPYLENE RUBBER DIAPHRAGM FOR 1-INCH GRINNELL-SAUNDERS VALVE (370 hours of operation)

* Registered Du Pont Trademark for its fluorocarbon resin.

As previously mentioned, an all metal flush-bottom tank valve was installed in the test loop. Extended, trouble-free operation indicated that it would be satisfactory for plant use. Information obtained during operation with this valve is summarized below.

1. There is probably no valve that will provide a constant slurry drawoff of 3 gpm, at 3 to 12 psi pressure drop, without a buildup of solids in the valve seat or between the valve plug and seat. With the plug in the test valve positioned for a 3 gpm drawoff rate, solids accumulated and the flow decreased slowly until complete blockage occurred. This buildup of solids does not result in permanent pluggage, however, because either opening or closing the valve flushes the solids away. With the test valve shown in Fig. 10 (3/4-inch seat), the minimum flow that could be maintained without blockage was about 9 gpm.

2. Flow through valve seats with 1/4- and 3/8-inch openings at several loop pressures was measured, and is shown in Fig. 22. Pressures in the plant transfer loop at the drawoff valve are expected to vary between 1 and 12 psi, depending on elevation and the distance to the tank where the drawoff valve is located.

The test data indicate that the plant transfer loop should be provided with drawoff valves of such a size that the drawoff rate at the expected operating pressure is equal to the maximum rate at which concentrate can be discharged from the evaporator (~10 gpm). The valve can then be operated essentially "on-off" to give an average drawoff rate equal to the volume of concentrate that is being produced in the evaporator.

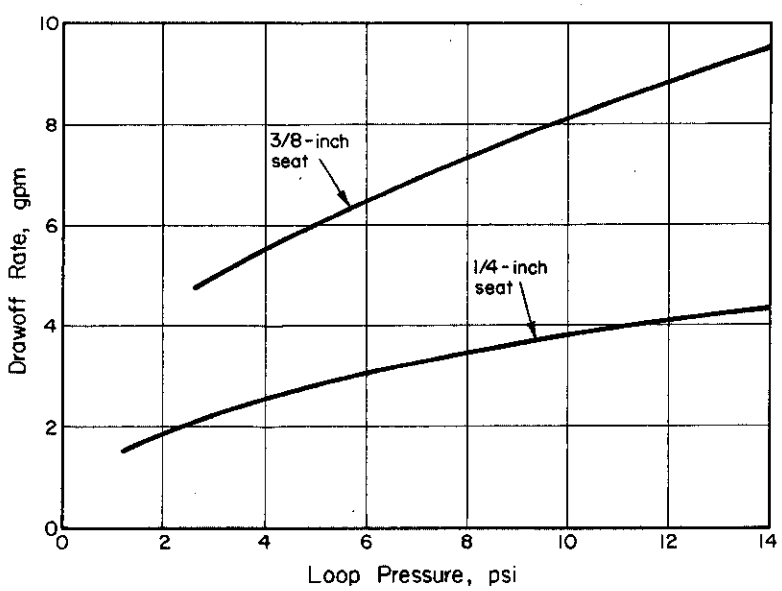

FIG. 22 LOOP PRESSURE VERSUS DRAWOFF RATE (Drawoff and return valves wide open, loop pressure varied with pump discharge valves)

STEAM LIFT

Steam lift rates as a function of steam pressure for five boildown concentrations are shown in Fig. 23; concentration has little effect on the lift rate. The lift would not operate at boildown ratios in excess of 3.3 (73 wt % dissolved plus undissolved solids), nor would it operate at any of the boildown ratios tested with steam pressures lower than the 5 to 6 psig that corresponded to the lift submergence. When the waste was concentrated to a boildown ratio of 3.6 (77 wt % solids plus solute) lift operation was intermittent and erratic, and could not be relied upon for sustained operation.

At the completion of the tests (3.6 boildown ratio), the lift assembly was removed and the steam lift and the vessel were inspected. Fig. 24 is a photograph of the steam lift at this time, and Fig. 25 shows the large deposits of solids above the liquid level in the vessel interior. Fig. 26 shows the inside of the vessel after draining, but before cleaning. The heavy solids deposited on the coils and the sides and bottom of the vessel, and the solids "caked" on the steam supply line to the lift were analyzed. The solids on the lower portions of the vessel were enriched in CO_3^{2-} and SO_4^{2-}. Similar experience in the plant with the gravity drain system indicated that these solids can be removed readily with a hot water flush.

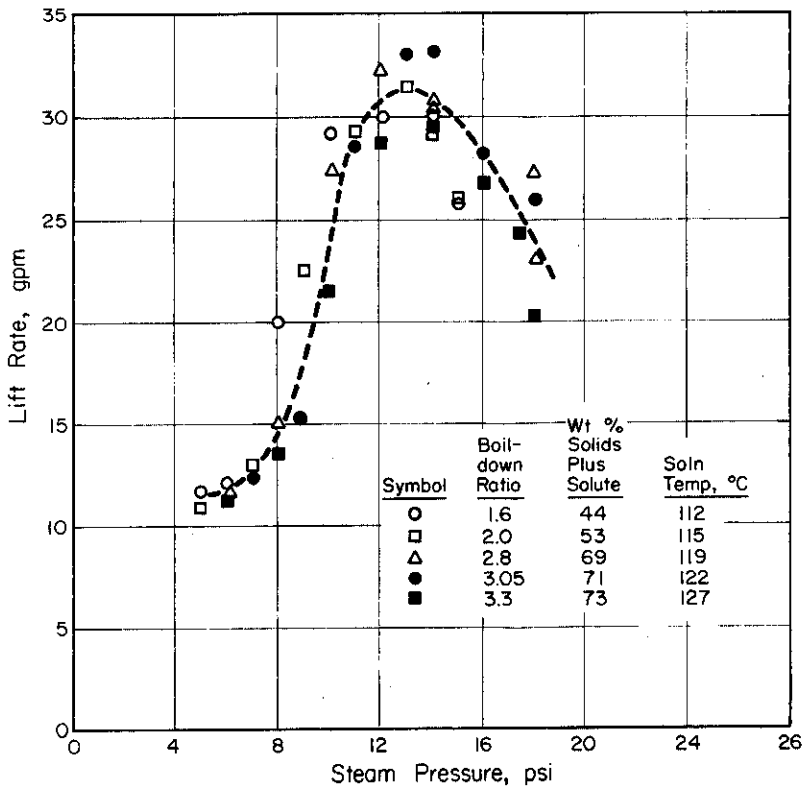

FIG. 23 CHARACTERISTICS OF STEAM LIFT

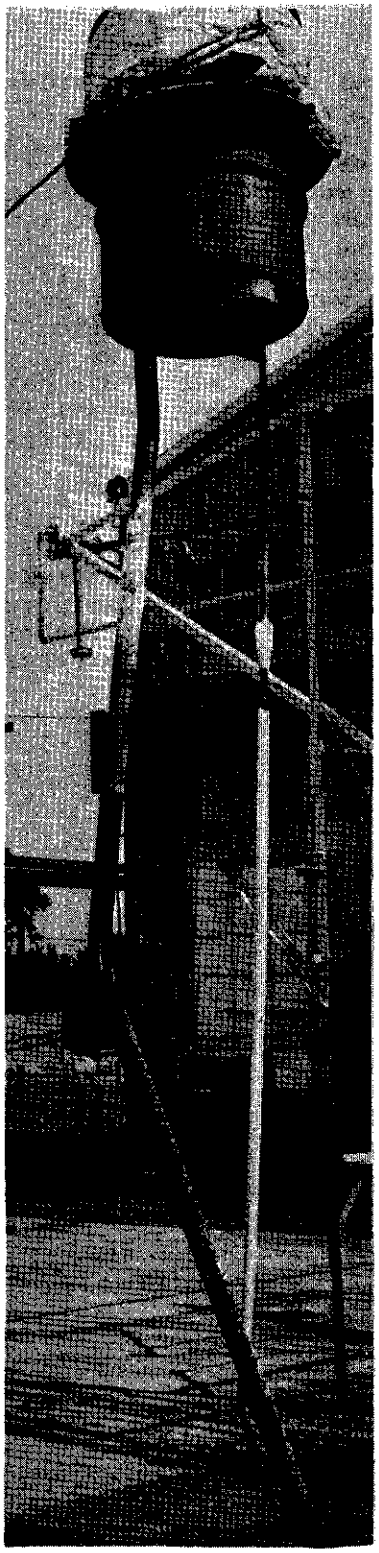

FIG. 24 STEAM LIFT AFTER REMOVAL FROM VESSEL
(Note solids on steam supply line)

FIG. 25 SOLUTION IN VESSEL BEFORE DRAINING (Note viscous surface and solids at wall, solution at boiling point)

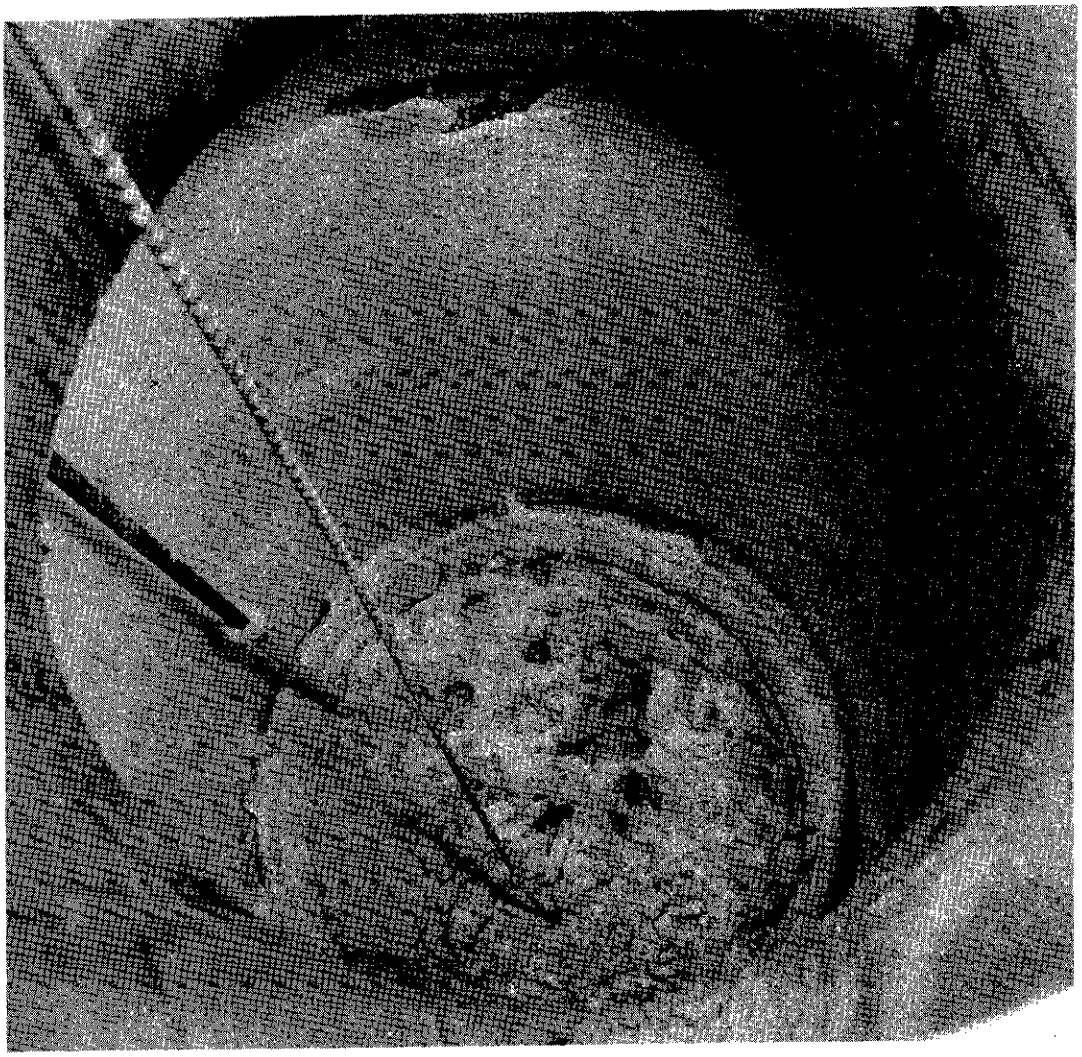

FIG. 26 VESSEL AFTER DRAINING (Ambient temperature)

PLANT OPERATION

A waste transfer system incorporating the results of this test program (Fig. 27) was installed in the F-Area Separations Plant to transfer aged alkaline waste to four underground waste storage tanks at distances ranging from 300 to 600 ft from the pump pit. This system uses the all-metal, flush-bottom tank valve or modification of this valve to control the flow of solution within the transfer system. Cleanout facilities allow insertion of flexible tubes into the plant transfer lines to flush out any blockage that might occur. The facility was designed to handle concentrated wastes with a maximum of 100 Ci/gal of gamma radiation at 0.75 Mev (principally ^{137}Cs), with shielding to limit the radiation intensity in all operating areas to a maximum of 10 mR/hr at the surface. This system has operated satisfactorily on full-level radioactive waste since startup in July 1967.

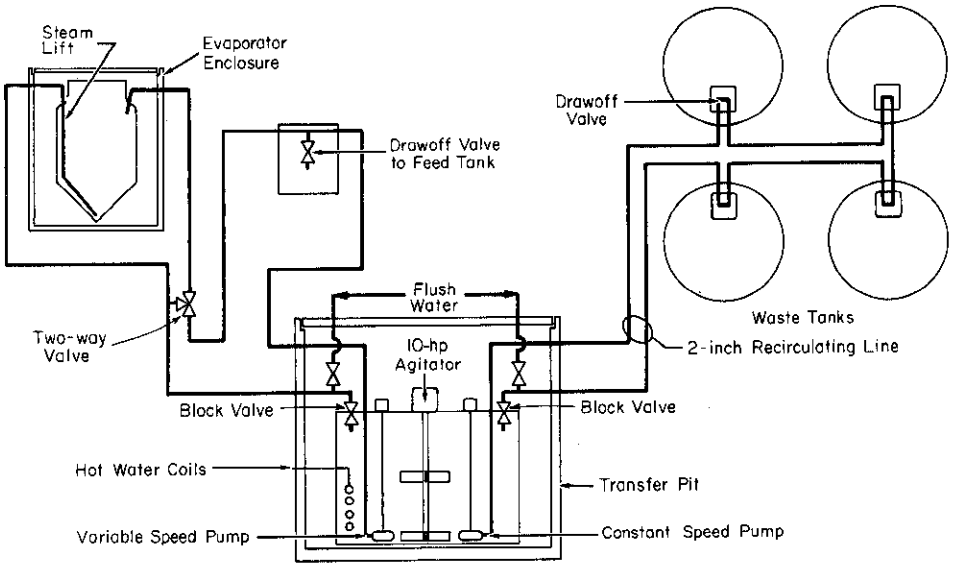

FIG. 27 PLANT CONCENTRATE TRANSFER SYSTEM (Notes: Cleanouts every 100 feet or every 2 bends. All lines jacketed; jackets drain to sump in transfer pit. All lines sloped to prevent pockets.)

(See pages 32 through 34 for details of the system.)

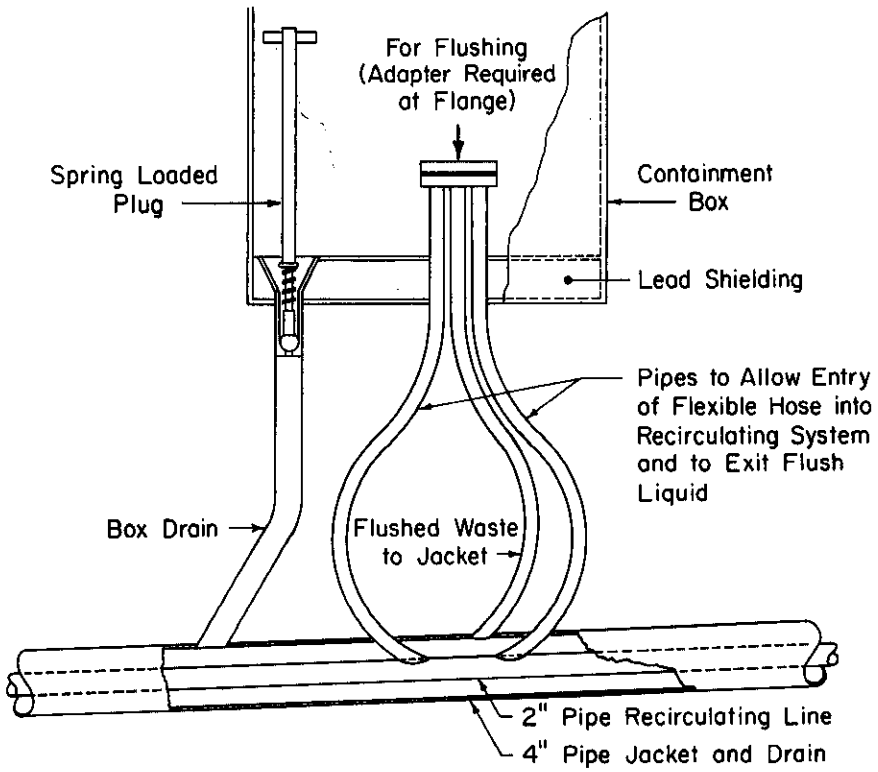

CLEANOUT FACILITY

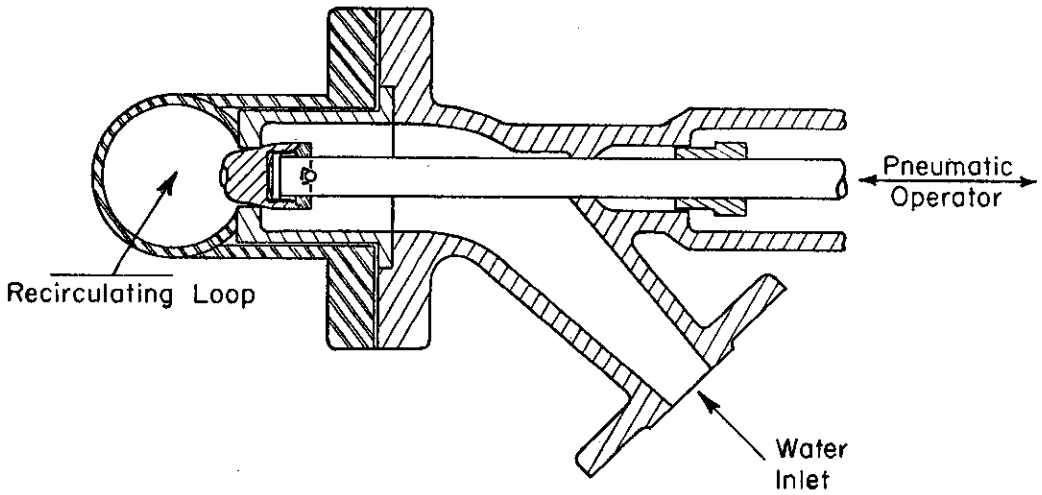

FLUSH WATER INLET VALVE

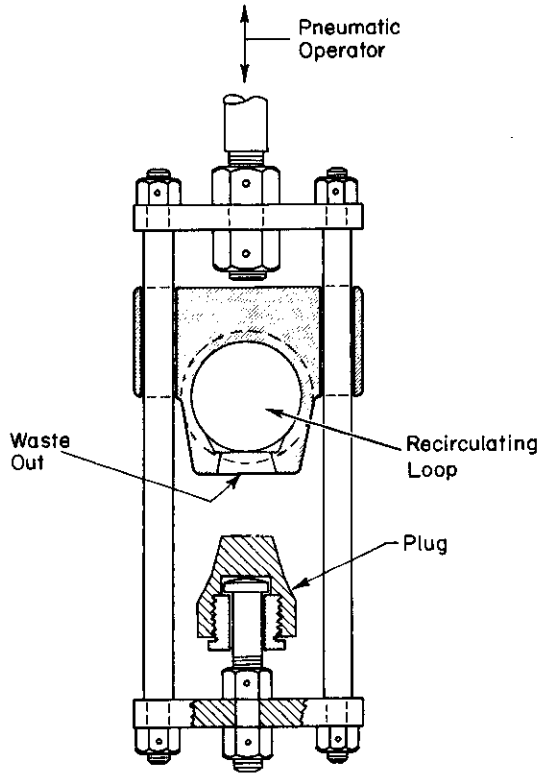

DRAWOFF VALVE

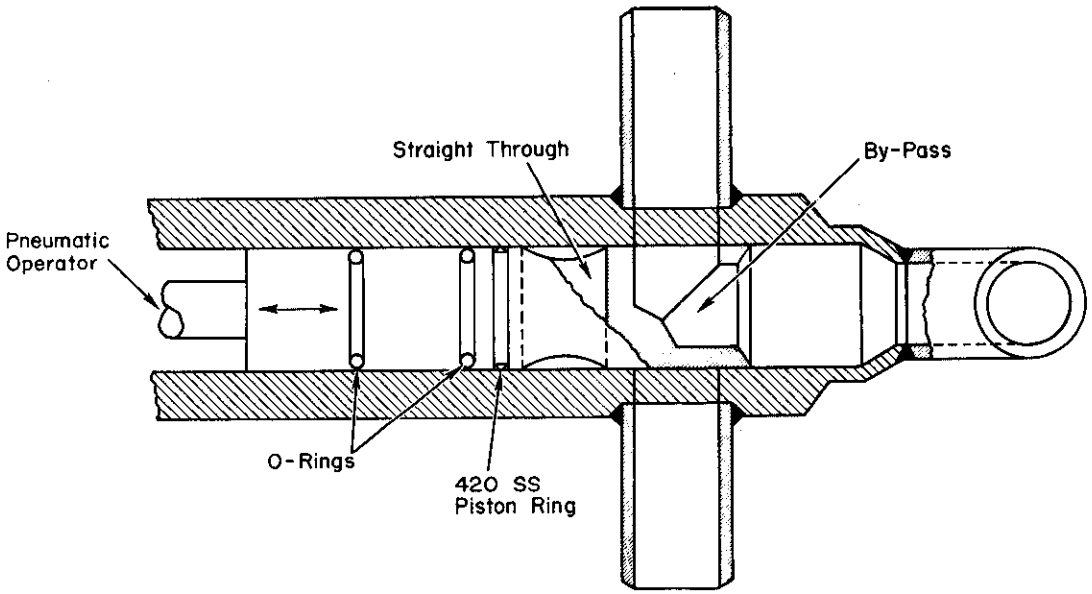

TWO WAY VALVE

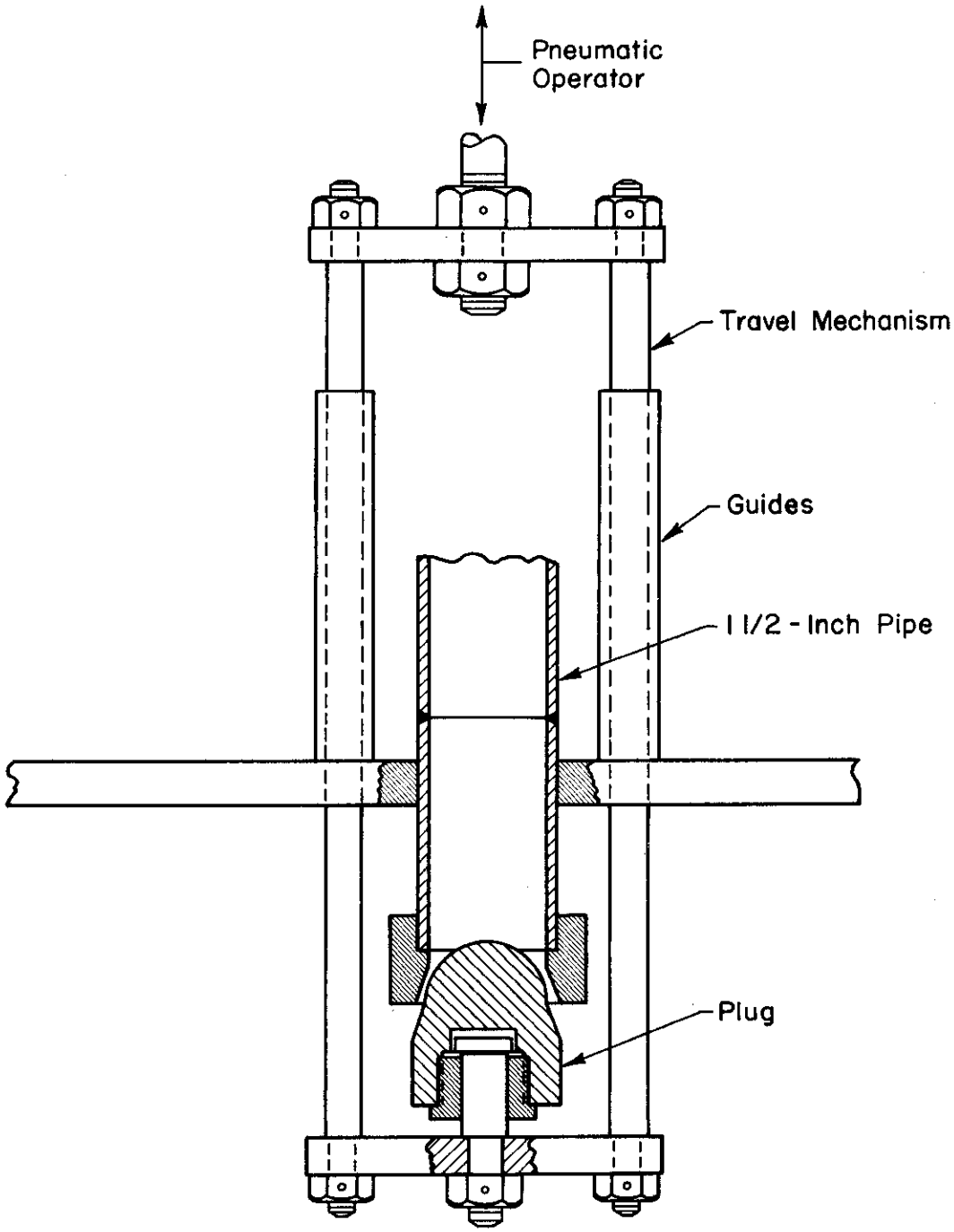

RECIRCULATING LOOP BLOCK VALVE

BIBLIOGRAPHY

1. "Treatment and Storage of High-Level Radioactive Wastes." *Proceedings of the Symposium on Treatment and Storage of High-Level Radioactive Wastes,* held by the International Atomic Energy Agency in Vienna, Austria, 8-12 October 1962 (February 1963).

2. C. B. Goodlett. *Concentration of Radioactive Wastes.* USAEC Report DP-1135, E. I. du Pont de Nemours and Co. Savannah River Laboratory, Aiken, S. C. (June 1968).

3. R. M. Girdler. "Handling of Low and Medium Level Liquid Waste at Savannah River Plant." *Practices in the Treatment of Low-Level and Intermediate-Level Radioactive Wastes.* Published by the International Atomic Energy Agency, Vienna, Austria, p 477 (December 1965).

4. A. J. Hill, Jr. *Removal of Sludge from High Activity Waste Tanks.* USAEC Report DP-1093, E. I. du Pont de Nemours and Co., Savannah River Laboratory, Aiken, S. C. (July 1967).

5. E. Condolios and E. E. Chapus. "Designing Solids-Handling Pipelines." *Chem. Eng.* 70, No. 14, pp 131-138 (July 8, 1963).

6. G. A. Hughmark. "Aqueous Transport of Settling Slurries." *Ind. Eng. Chem.* 53, pp 389-390 (1961).

7. K. E. Spells. "Correlations for Use in Transport of Aqueous Suspensions of Fine Solids Through Pipes." *Trans. Instn. Chem. Engrs.* 33, No. 2, pp 79-84 (1955).